CFORCE 850XC

CF800ATR-3
OWNER'S MANUAL

READ THIS MANUAL CAREFULLY
It contains important safety information
This ATV should not be ridden by anyone under 16 years of age. Passenger under 12 are prohibited.

CFMOTO
EXPERIENCE MORE TOGETHER

⚠WARNING

Read, understand, and follow all of the instructions and safety precautions in this manual and on all product labels. Failure to follow the safety precautions could result in serious injury or death.

⚠WARNING

The engine exhaust gas from this product contains CO, which is deadly gas and could cause headache, giddy, disgusting or lose consciousness, even death.

⚠WARNING

Engine box cover, brake disc and muffler exhaust pipe will be hot easily after long period usage. Avoid being burned by those parts.

Foreword

Thank you for purchasing a CFMOTO vehicle, and welcome to join our worldwide family of CFMOTO owners.

We proudly produce an exciting line of utility and recreational products:

- All terrain vehicles (ATVs)
- Utility and Side-by-Side vehicles (patrol, forest protecting and hunting)
- Motorcycles and scooters

CFMOTO, a company which specializes in production of liquid-cooled engines, is the top-level supplier in China. Compared to same displacement of air-cooled engine, engine cooling is more effective, oil temperature is more stable, the engine is more powerful with lower fuel consumption, and has a longer working life.

For safe and enjoyable operation of your vehicle, be sure to follow the instructions and recommendations in this owner's manual. Your manual contains instructions for minor maintenance.

Information about major repairs are outlined in the CFMOTO service manual and should be performed only by CFMOTO service dealer and technician.

Your CFMOTO dealer knows your vehicle best and is interested in your total satisfaction. Be sure to return to your dealership for all of your service.

Due to constant improvements in the design and quality of production components, some minor discrepancies may result between the actual vehicle and the information presented in this manual. Depictions and/or procedures in this publication are intended for reference use only.
The most current version of this manual can be found online at www.cfmoto-online.cn.

TABLE OF CONTENTS

Foreword 3
Vehicle Identification Numbers 5
Operator Safety 6
Safety Decals and Locations 43
Safe Riding Gear 47
Features & Controls 49
Electrical Switches 49
Brake 51
Automatic Transmission Gear Selector 58
Four Wheel Drive(4WD)System 60
Indicators and Warning Lights 64
Operation 69
Break-In Period 69
Pre-Ride Inspection 71
Starting the Engine 74
Gear Selector Operation and Reverse Driving 76
Hauling Cargo 79
Driving Safely 81
Maintenance & Lubrication 95
Severe Use Definition 95
Maintenance Procedures 96
Cleaning & Storage 131
Troubleshooting 137
Technical Specification 147
Periodic Maintenance Schedule and Icon Key 154
Limited Warranty 162

VEHICLE IDENTIFICATION NUMBERS

Record your ATV's identification numbers in the spaces provided. Remove the spare key and store in a safe place. Your key can be duplicated only by mating a key blank with one of your existing keys. So if both keys are lost, the complete lock assembly must be replaced.

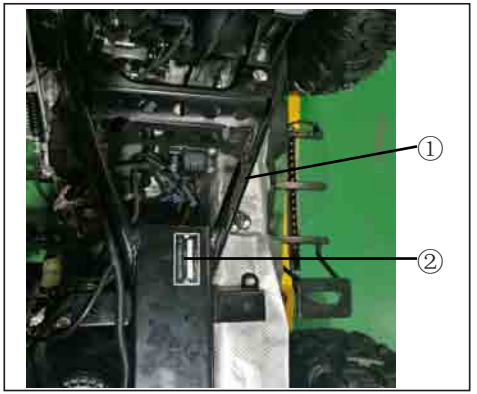

① **Vehicle identification number:** _____

② **Vehicle model number:** _____

③ **Engine serial number:** _____

Operator Safety

⚠WARNING

Failure to heed the warnings contained in this manual can result in serious injury or death. A tractor is not a toy and can be hazardous to operate. This vehicle handles differently from other vehicles, such as motorcycles and cars. A collision or rollover can occur quickly, even during routine manneuvers like turning, or driving over obstacles, if you fail to take proper precautions.
Read this owner's manual. Understand all safety warnings, precautions and operating procedures before operating this tractor.

Age Restrictions

This vehicle is an ADULT VEHICLE ONLY. Operation is prohibited for anyone under the age of 16.

Know Your Vehicle

As the operator of the vehicle, you are responsible for your personal safety, the safety of others, and the protection of our environment. Read and understand your owner's manual, which includes valuable information about all aspects of your vehicle, including safe operating procedures.

Operator Safety

Familiarize yourself with all laws and regulations concerning the operation of this vehicle in your area. CFMOTO strongly advises you to strictly follow the recommended maintenance program outlined in your owner's manual. This preventive maintenance program is designed to ensure that all critical components on your vehicle are thoroughly inspected at specific intervals. The following signal words and symbols appear throughout this manual and on your ATV. Your safety is involved when these words and symbols are used. Be familiar with their meanings before reading the manual.

Operator Safety

⚠WARNING

The warning alert and icon indicates a potential hazard that may result in serious injury or death.

⚠CAUTION

The caution alert and icon indicates a potential hazard that may result in minor personal injury or damage to the vehicle.

CAUTION

This safety alert indicates a situation that may result in damage to the vehicle.

NOTE

A note will alert you to important information or instructions.

- Read this manual and all labels carefully, and follow the operating procedures described.

Operator Safety

- Never operate a tractor without proper instruction. Take a training course. Beginners should receive training from a certified instructor. Contact an authorized dealer to find the training courses nearest you.
- Never allow anyone under 16 to operate this tractor.
- Never permit a guest to operate the tractor unless the guest has read this manual and all product labels labels and has completed a certified safety training course.
- Never operate a tractor without wearing an approved helmet that fits properly. Always wear eye protection (goggles or face shield), gloves, boots, a long-sleeved shirt or jacket, and long pants.
- Never consume alcohol or drugs before or while operating a tractor.
- Never operate at excessive speeds. Travel at speeds appropriate for the terrain, visibility and operating conditions, and your experience.
- Never attempt wheelies, jumps or other stunts.
- Always inspect your tractor before each use to make sure it's in safe operating condition.
- Always follow the inspection and maintenance procedures and schedules outlined in your owner's manual.

Operator Safety

- Always keep both hands on the handlebars and both feet on the footrest of the tractor during operation.
- Always travel slowly and use extra caution when operating on unfamiliar terrain. Be alert to terrain conditions.
- Never operate on excessively rough, slippery, or loose terrain.
- Always follow proper turning procedures as described in this manual. Practice turning at low speeds before attempting to turn at faster speeds. Do not turn at excessive speeds.
- Always have the tractor inspected by an authorized dealer if it's been involved in an accident.
- Never operate on hills too steep for the tractor or for your abilities. Practice on smaller hills before attemping larger hills.
- Always follow proper procedures for climbing hills. Check the terrain carefully before ascending a hill.
- Never climb hills with excessively slippery or loose surface. Shift your weight forward.
- Never open the throttle suddenly or make sudden gear changes.
- Never go over the top of a hill at high speed.

Operator Safety

- Always follow proper procedures for going downhill and for braking on hills. Check the terrain carefully before you start down a hill. Shift your weight backward. Never go down a hill at high speed. Avoid going down a hill at an angle, which would cause the vehicle to lean sharply to one side. Travel straight down the hill when possible.
- Always follow proper procedures for crossing the side of a hill. Avoid hills with excessively slippery or loose surfaces. Shift your weight to the uphill side of the tractor. Never attempt to turn the ATV around on any hill until you've mastered (on level ground) the turning technique outlined in this manual. Avoid crossing the side of a steep hill when possible.
- Always use proper procedures if you stall or roll backwards while climbing a hill. To avoid stalling, maintain a steady speed when climbing a hill. If you stall or roll backwards, follow the special procedure for braking described in this manual. Always dismount on the uphill side, or to either side if the ATV is pointed straight uphill. Turn the ATV around and remount following the procedure described in this manual.

Operator Safety

- Always check for obstacles before operating in a new area. Never attempt to operate over large obstacles, such as rocks or fallen trees. Always follow proper procedures when operating over obstacles as described in this manual.
- Always be careful of skidding or sliding. On slippery surfaces like ice, travel slowly and use extra caution to reduce the chance of skidding or sliding out of control.
- Avoid operating the tractor through deep or fast-flowing water. If it's unavoidable, travel slowly, balance your weight carefully, avoid sudden movements, and maintain a slow and steady forward motion. Do not make sudden turns or stops, and do not make sudden throttle changes.
- Wet brakes may have reduced stopping ability. Test your brakes after leaving water. If necessary, apply them lightly several times while driving slowly to allow friction to dry out the pads.
- Always check for obstacles or people behind the tractor before operating in reverse. When it's safe to proceed in reverse, move slowly and avoid turning at sharp angles.

Operator Safety

- Always use the size and type of tires specified for your tractor, and always maintain proper tire pressure.
- Never modify a tractor through improper installation or use of accessories.
- Never exceed the stated load capacity for your tractor. Cargo must be properly distributed and securely atached. Reduce speed and follow the instructions in this manual for carrying cargo or towing. Allow a greater distance for braking.
- Always remove the ignition key when the vehicle is not in use to prevent unauthorized use or accidental starting.
- Children or pets shall not be carried on the racks.
- Never touch running parts, such as wheels, drive shaft, etc.

FOR MORE INFORMATION ABOUT ATV SAFETY, PLEASE CONTACT YOUR DEALER.

Operator Safety

Equipment Modifications

CFMOTO is concerned with the safety of our customers and for the general public. Therefore, we strongly recommend that consumers do not install on a tractor, any equipment that may increase the speed or power of the vehicle, or make any other modifications to the vehicle for these purposes. Any modifications to the original equipment of the vehicle create a substantial safety hazard and increase the risk of body injury.

The warranty on your tractor is terminated if any equipment has been added to the vehicle, or if any modifications have been made to the vehicle, that increase its speed or power.

NOTE

The addition of certain accessory equipment which may change the handling and performance characteristics of the vehicle include, but are not limited to; mowers, plow blades, oversize tires, sprayers, large racks, lift kits and trailers. Use only approved accessories, and familiarize yourself with their function and effect on the vehicle.

Avoid Burns from Hot Parts

Certain components become hot during operation.Avoid contact with those parts during and shortly after operation to avoid burns.

Pulling a Trailer

Check the maximum axle loads of the vehicle identification plate (statutory plate). CFMOTO tractor can tow a trailer on the road. Check the trailer,the maximum loads on the identification plate. Check the national packages limits the use of a tractor-trailer on the road. Connect the trailer lights and set the slow moving vehicle triangle behind the trailer.

NOTE

CFMOTO approved rear hitch must be properly installed on the vehicle for hauling trailers.

Riding this vehicle with a trailer substantially increases the risk of toppling, especially on inclined slopes is a trailer is used behind the vehicle make sure that its hitch is compatible with the one on the vehicle.

Make sure the trailer is horizontal with the vehicle. (In some instances a special extension may have to be installed on the vehicle hitch).Use security chains or cables to secure the trailer with the vehicle.

Reduce your speed when pulling a trailer and turn gradually. Avoid hills and rough terrain. Never attempt steep hills. Allow more distance for braking, especially on inclined surfaces and when a passenger is on board. Be careful not to skid or slide.

If a trailer is used behind the vehicle make sure that its hitch is compatible with the one on the vehicle. Make sure the trailer is horizontal with the vehicle. (In some instances a special extension may have to be installed on the vehicle hitch). Use security chains or cables to secure the trailer with the vehicle.
This vehicle may require additional stopping distance if hauling heavy loads, especially on inclined surfaces and when a passenger is on board. Improperly loading a trailer may cause loss of control. Respect the recommended maximum hauling capacity and maximum tongue load. Make sure there is at least some weight on the tongue.

Always make sure load is evenly distributed and safely secured on the trailer; an evenly balanced trailer is easier to control. Always put the shift lever to L (low range) for hauling a trailer in addition to providing more torque, operating in low range helps account for the increased load on the rear tires.
When stopped or parked, block the vehicle and trailer wheels from possible move- ment. Use caution when disconnecting a loaded trailer; it or its load may topple on you or others. When hauling a trailer, respect the following maximum hauling capacity.

MAXIMUM HAULING CAPACITY			
TRAILER LOAD ALLOWED	TONGUE WEIGHT ALLOWED	NOTE	
300 kg	25 kg	Trailer without brakes	Includes trailer and trailer load. Ensure to properly load the trailer so that tongue is always pushing on hitch support and not pulling on hitch ball.
NOTE: Includes trailer and trailer load. Ensure to properly load the trailer so that tongue is always pushing on hitch support and not pulling on hitch ball.			

⚠ WARNING

Stay clear from the area between tractor and trailed vehicle.

⚠ WARNING

Strictly follow the instructions outlined in the operator s manual of the mounted or trailed machinery or trailer, and not to operate the combination tractor - machine or tractor - trailer unless all instructions have been followed.

Place a support under vehicle.

NOTE: Before jacking ensure that all wheels are locked.

NOTE: When the brake lock is applied ensure that the vehicle stays securely securely in place.

TYPICAL FRONT UP POINT LOCATION

⚠ WARNING

DO NOT OVERLOAD your jack beyond its rated capacity. Use jack which is designed for use on hard level surfaces only. Use lifting device only. DO not move or dolly the vehicle while on the jack. Refer to jack warnings and operating instructions prior to use.

NOTE: Ensure that 4 WH is engaged and brake is locked.

TYPICAL BACK UP POINT LOCATION

INTENDED USE The tractor is designed solely for use in agricultural or similar operations. Use in any other way is considered as contrary to the intended use. Compliance with and strict adherence to the conditions of operation, service, and repair as specified by the manufacturer, also constitute essential elements of the intended use. The tractor should be operated, serviced, and repaired only by persons who are familiar with its particular characteristics and who are acquainted with the relevant safety procedures. Accident prevention regulations, all other generally recognized regulations on safety and occupational medicine, and all road traffic regulation must be observed at all times. Any arbitrary modifications carried out to this tractor may relieve the manufacturer of liability for any resulting damage or injury. The agricultural tractors can not be used in conditions which may cause the risk of contact with hazardous substances, e.g. spraying of pesticides. In addtion, the agricultural tractors also can not used in conditions which may risk of falling and penetrating objects.

Hauling a Load
(if Equipped with Hitch)

Never pull a load by attaching it to the cage; this can cause the vehicle to tip over. Use only the trailer hitch (if installed) to pull a load.

In an emergency situation, use the recovery hook to recover a stuck vehicle.

When pulling loads with a chain or cable, ensure that there is no slack before starting and maintain tension while pulling.

When pulling loads with a chain or cable, be sure to brake progressively. The inertia of the load could lead to an impact.

When hauling a load, respect the maximum hauling capacity. See *PULLING A TRAILER*subsection.

⚠ WARNING

Slack can cause the chain or cable to break and snap back.

When pulling another vehicle, be sure that someone is controlling the pulled vehicle. They must brake and steer to prevent the vehicle from going out of control.

Reduce your speed when hauling a load and turn gradually. Avoid hills and rough terrain. Never attempt steep hills. Allow more distance for braking, especially on inclined surfaces and when a passenger is on board.
Be careful not to skid or slide.

Accessories and Modifications

If no such attachment points are foreseen, the operator s manual shall prohibit the installation of a frontend loader

This T3 has not attachment points for frontend loader. Do not install front loader.

Where a designated attachment point is provided on the towbar:

Either:

a) Pass the cable through the attachment point and clip it back on itself (FIG.1)

Fig 1

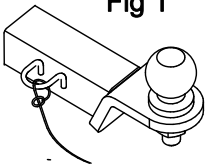

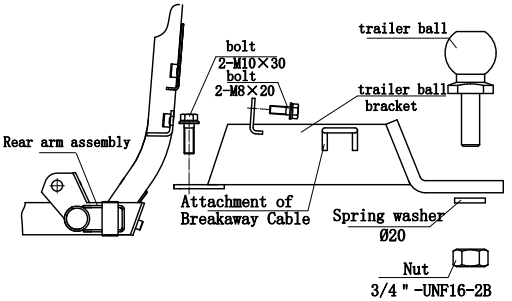

Or:

b) Attach the clip directly to the designated point (Fig.2). This alternative must be specifically permitted by the trailer manufacturer since the clip may not be sufficiently strong for use in this way.

Fig 2

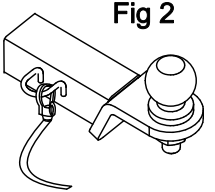

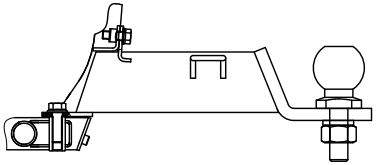

⚠WARNING

POTENTIAL HAZARD

Operating this Tractor without proper instruction.

WHAT CAN HAPPEN

The risk of an accident is greatly increased if the operator does not know how to operate the Tractor properly in different situations and on different types of terrain.

⚠WARNING

POTENTIAL HAZARD

Failure to follow the age recommendations for this Tractor.

Dismantling and disposal Caution ALWAYS BE ENVIRONMENTALLY RESPONSIBLE Follow the guidelines of the governmental agency for the proper disposal of hazardous materials such as engine oil, fuel, engine coolant and machine fluid, grease. Never disposal of hazardous materials irresponsibly by dumping them into a sewer, on the ground, or into groundwater or waterways. Failure to follow these procedures may seriously harm the environment. Comply with legal regulations and guidelines for disposal of: empty containers for fuel, cooling water (coolant), oil, grease; fuel/oil filters; battery; machine itself; machine accessories; and packaging materials.

HOW TO AVOID THE HAZARD

Never carry 2 or more passengers on this tractor.

POTENTIAL HAZARD

Carrying a passenger in the rear rack.

WHAT CAN HAPPEN

A passenger riding in the rear rack could be ejected from the vehicle unexpectedly or may contact moving moving components, both of which can result in severe injury or death.

HOW TO AVOID THE HAZARD

Never allow passengers to ride in the rear rack.

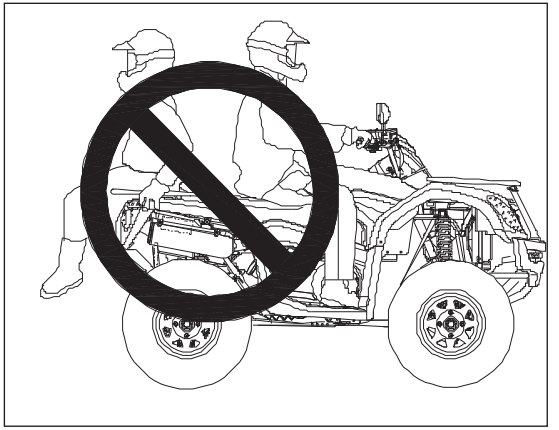

⚠WARNING

POTENTIAL HAZARD

Operating this tractor without wearing an approved helmet, eye protection, and protective clothing.

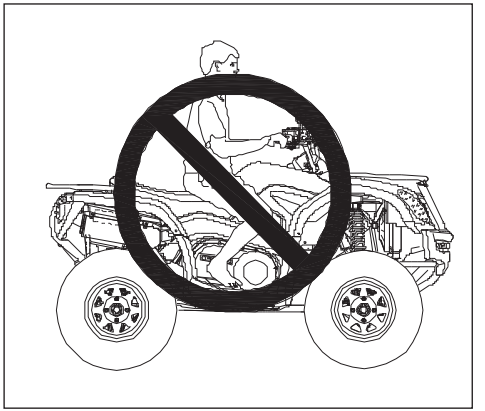

WHAT CAN HAPPEN

Operating a tractor without an approved helmet increases the risk of a severe head injury or death in the event of an accident. Operating without eye protection could result in an accident and could increase the chance of a severe eye injury in the event of an accident.

HOW TO AVOID THE HAZARD

Always wear an approved helmet that fits properly.

Always wear eye protection (goggles or face shield), gloves, long-sleeved shirt or jacket, and long pants.

⚠WARNING

POTENTIAL HAZARD

Operating the tractor after consuming alcohol or drugs.

WHAT CAN HAPPEN

Consumption of alcohol and/or drugs could seriously affect operator judgment. Reaction time may be slower and operator balance and perception could be affected. Consumption of alcohol and/or drugs before or while operating a tractor could result in an accident causing severe injury or death.

HOW TO AVOID THE HAZARD

Never consume alcohol or drugs before or while operating a tractor..

⚠WARNING

POTENTIAL HAZARD

Operating the tractor at excessive speeds.

WHAT CAN HAPPEN

Excessive speed increase the operator's chance of losing control of the tractor, which can result in an accident.

HOW TO AVOID THE HAZARD

Always operate the tractor at a speed that's proper for the terrain, visibility and operating conditions, and your experience.

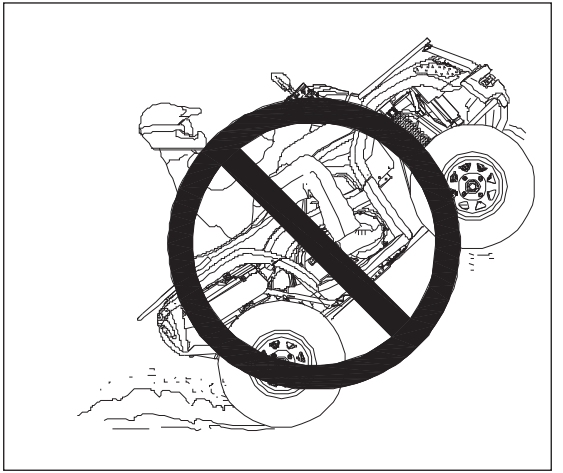

⚠WARNING

POTENTIAL HAZARD

Attempting wheelies, jumps and other stunts.

WHAT CAN HAPPEN

Attempting stunts increases the chance of an accident, including an overturn.

HOW TO AVOID THE HAZARD

Never attempt wheelies, jumps, or other stunts. Avoid exhibition driving.

⚠WARNING

POTENTIAL HAZARD

Failure to inspect the tractor before operating. Failure to properly maintain the tractor.

WHAT CAN HAPPEN

Poor maintenance increases the possibility of an accident or equipment damage.

HOW TO AVOID THE HAZARD

Always inspect your tractor before each use to make sure it's in safe operating condition.

Always follow the inspection and maintenance procedures and schedules described in the owner's manual.

⚠WARNING

POTENTIAL HAZARD

Removing hands from the handlebars or feet from the footrests during operation.

WHAT CAN HAPPEN

Removing even one hand or foot can reduce ability to control the vehicle or could cause loss of balance and ejection from the tractor.

If the operator's foot is not firmly planted on the footrest, it could come into contact with the rear wheels and lead to accident or injury.

HOW TO AVOID THE HAZARD

Always keep both hands on the handlebars and both feet on the footrests of the tractor during operation.

⚠WARNING

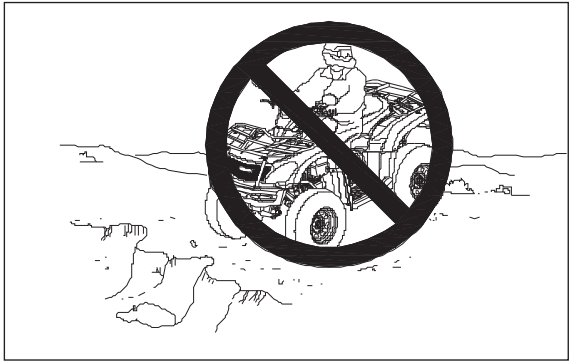

POTENTIAL HAZARD

Failure to use extra caution when operating the tractor on unfamiliar terrain.

WHAT CAN HAPPEN

Unfamiliar terrain may contain hidden rocks, bumps, or holes that could cause loss of control or overturn.

HOW TO AVOID THE HAZARD

Travel slowly and use extra caution when operating on unfamiliar terrain. Always be alert to changing terrain conditions.

⚠WARNING

POTENTIAL HAZARD

Failure to use extra caution when operating on excessively rough, slippery or loose terrain.

WHAT CAN HAPPEN

Operating on excessively rough, slippery or loose terrain could cause loss of traction or loss of control, which could result in an accident or overturn.

HOW TO AVOID THE HAZARD

Do not operate on excessively rough, slippery or loose terrain until you've learned and practiced the skills necessary to control the tractor on such terrain. Always use extra caution on rough, slippery or loose terrain.

⚠WARNING

POTENTIAL HAZARD

Turning improperly.

WHAT CAN HAPPEN

Improper turns could cause loss of control and lead to a collision or overturn.

HOW TO AVOID THE HAZARD

Always follow proper procedures or turning as described in the owner's manual. Practice turning at slow speeds before attempting to turn at faster speeds.

Never turn at excessive speed.

⚠WARNING

POTENTIAL HAZARD

Operating on excessively steep hills.

WHAT CAN HAPPEN

The vehicle may overturn.

HOW TO AVOID THE HAZARD

Never operate on hills too steep for the tractor or for your abilities.Never operate the tractor on hills steeper than 22°.

Practice on smaller hills before attempting large hills.

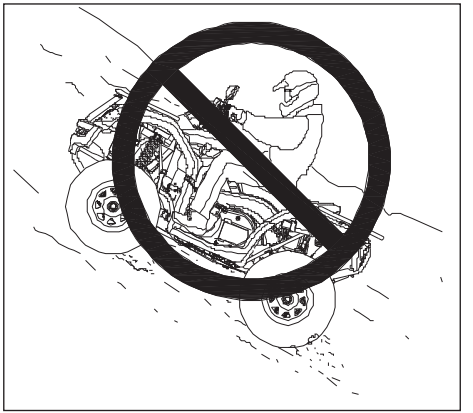

⚠WARNING

POTENTIAL HAZARD

Climbing hills improperly.

WHAT CAN HAPPEN

Improper hill climbing could cause loss of control or overturn.

HOW TO AVOID THE HAZARD

Always follow proper procedures for climbing hills as described in the owner's manual.

Always check the terrain carefully before ascending any hill. Never operate the tracor on hills steeper than 22°. Never climb hills with excessively slippery or loose surfaces. Shift your weight forward. Never open the throttle suddenly while traveling uphill. The tractor could flip over backwards. Never go over the top of any hill at high speed. An obstacle, a sharp drop, or another vehicle or person could be on the other side of the hill.

⚠WARNING

POTENTIAL HAZARD

Traveling downhill improperly.

WHAT CAN HAPPEN

Improperly descending a hill could cause loss of control or overturn.

HOW TO AVOID THE HAZARD

Always follow proper procedures for travelling down hills as described in the owner's manual.

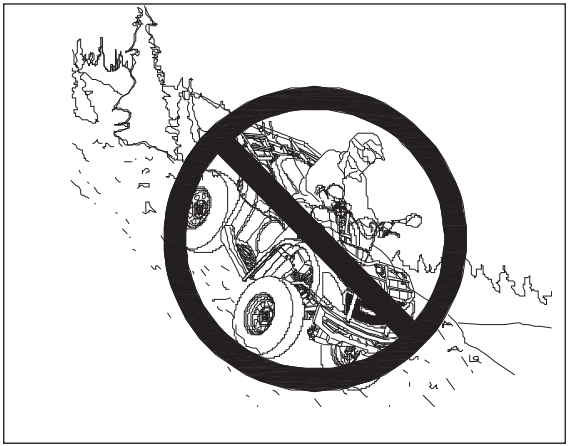

NOTE

A special technique is required when braking while traveling downhill. Always check the terrain carefully before descending a hill. Shift your weight backward. Never travel down a hill at high speed. Avoid traveling down a hill at an angle, which would cause the vehicle to lean sharply to one side. Travel straight down the hill when possible.

⚠WARNING

POTENTIAL HAZARD

Improperly crossing hills and turning on hills.

WHAT CAN HAPPEN

Improperly crossing or turning on hills could cause loss of control or overturn.

HOW TO AVOID THE HAZARD

Never attempt to turn the tractor around on any hill until you' ve mastered the turning technique on on level ground as described in the owner's manual.

Use extra caution when turning on any hill. Avoid crossing the side of a steep hill.

WHEN CROSSING THE SIDE OF A HILL:

Always follow proper procedures as described in the owner's manual.

Avoid hills with excessively slippery or loose surfaces. Shift your weight to use uphill side of the tractor.

⚠WARNING

POTENTIAL HAZARD

Stalling, rolling backwards or improperly dismounting while climbing a hill.

WHAT CAN HAPPEN

The vehicle could overturn.

HOW TO AVOID THE HAZARD

Maintain steady speed when climbing a hill.

IF ALL FORWARD SPEED IS LOST:

Keep your weight uphill. Apply the front brake. When fully stopped, apply the brake as well, then shift the gear to the park position.

IF THE ATV BEGINS ROLLING BACKWARD:

Keep weight uphill. Never apply engine power. Never apply the brake while rolling backwards.

Apply the front brake. When fully stopped, apply the brake as well, and shift the gear to parking.

Dismount on uphill side, or to either side if tractor is pointed straight uphill.

Turn the tractor around and remount, following the procedure described in the owner's manual.

⚠WARNING

POTENTIAL HAZARD

Improperly operating over obstacles.

WHAT CAN HAPPEN

Operating over obstacles could cause loss of control or overturn.

HOW TO AVOID THE HAZARD

Before operating in a new area, check for obstacles.

Avoid operating over large obstacles such as rocks and fallen trees when possible. If unavoidable, use extreme caution and always follow proper procedures as outlined in the owner's manual.

⚠WARNING

POTENTIAL HAZARD

Skidding or sliding.

WHAT CAN HAPPEN

Skidding or sliding can cause loss of control. If the tires regain traction unexpectedly, the tractor could overturn.

HOW TO AVOID THE HAZARD

On slippery surfaces such as ice, travel slowly and use extra caution to reduce the chance of skidding or sliding out of control.

⚠WARNING

POTENTIAL HAZARD

Overloading the tractor or carrying/towing cargo improperly.

WHAT CAN HAPPEN

Overloading and towing can cause changes in vehicle handling, which could lead to loss of control or an accident.

HOW TO AVOID THE HAZARD

Never exceed the stated load capacity for this tractor.

Cargo should be properly distributed and securely attached. Reduce speed when carrying cargo or pulling a trailer. Allow a greater distance for braking.

Always follow the instructions in the owner's manual for carrying cargo or pulling a trailer.

⚠WARNING

POTENTIAL HAZARD

Operation the tractor through deep or fast-flowing water.

WHAT CAN HAPPEN

The tires may float, causing loss of traction and loss of control, which lead to an accident or overturn.

HOW TO AVOID THE HAZARD

Avoid operating the tractor through deep or fast-flowing water. If it is unavoidable to enter water that exceeds the recommended maximum depth, travel slowly, balance your weight carefully, avoid sudden movements, and maintain a slow and steady forward motion. Do not make sudden turns or stops, and do not make sudden throttle changes. Wet brakes may have reduced stopping ability.

Always test the brakes after leaving water. If necessary, apply brakes several times while driving slowly to dry out the pads.

⚠WARNING

POTENTIAL HAZARD

Improperly operating in reverse.

WHAT CAN HAPPEN

The tractor could collide with an obstacle or person, resulting in severe injury.

HOW TO AVOID THE HAZARD

Before shifting into reverse gear, always check for obstacles or people behind the tractor. When it's safe to proceed, back slowly.

⚠WARNING

POTENTIAL HAZARD

Operating this tractor with improper tires, or with improper or uneven tire pressure.

WHAT CAN HAPPEN

Use of improper tires, or operation of the tractor with improper or uneven tire pressure, could cause loss of control or accident.

HOW TO AVOID THE HAZARD

Always use the size and type of tires specified in the owner's manual for the tractor. Always maintain proper tire pressure.

⚠WARNING

POTENTIAL HAZARD

Operating the tractor with improper modifications.

WHAT CAN HAPPEN

Improper installation of accessories or modification of the tractor may cause changes in handling which could lead to an accident.

HOW TO AVOID THE HAZARD

Never modify the tractor through improper installation or use of accessories. All parts and accessories added to the vehicle must be genuine parts or equivalent components designed for use on this tractor and should be installed and used according to approved instructions. Consult your dealer for more information.

⚠WARNING

POTENTIAL HAZARD

Operating on frozen bodies of water.

WHAT CAN HAPPEN

Severe injury or death can result if the tractor and or the operator fall through the ice.

HOW TO AVOID THE HAZARD

Never operate the tractor on a frozen body of water.

Operator Safety

⚠WARNING

Leaving the keys in the ignition can lead on unauthorized use of the vehicle resulting in serious injury or death. Always remove the ignition key when the vehicle is not in use.

⚠WARNING

After any overturn or accident, have a qualified service dealer inspect the entire vehicle for possible damage, including (but not limited to) brakes, throttle and steering systems.

⚠WARNING

Safe operation of this rider-active vehicle requires good judgement and physical skills.
Persons with cognitive or physical disabilities who operate this vehicle have an increased risk of overturn and loss of control, which could result in severe injury or death.

⚠WARNING

Exhaust system components are very hot during and after use of the vehicle. Hot components can cause cause serious burns and fire. Do not touch hot exhaust system components. Always keep combustible materials away from the exhaust system. Use caution when traveling through tall grass, expecially dry grass.

Safety decals and locations

Warning decals have been placed on the Tractor for your protection. Read and follow the instructions on each decal carefully. If a decal becomes illegible or comes off, contact your dealer to purchase a replacement.

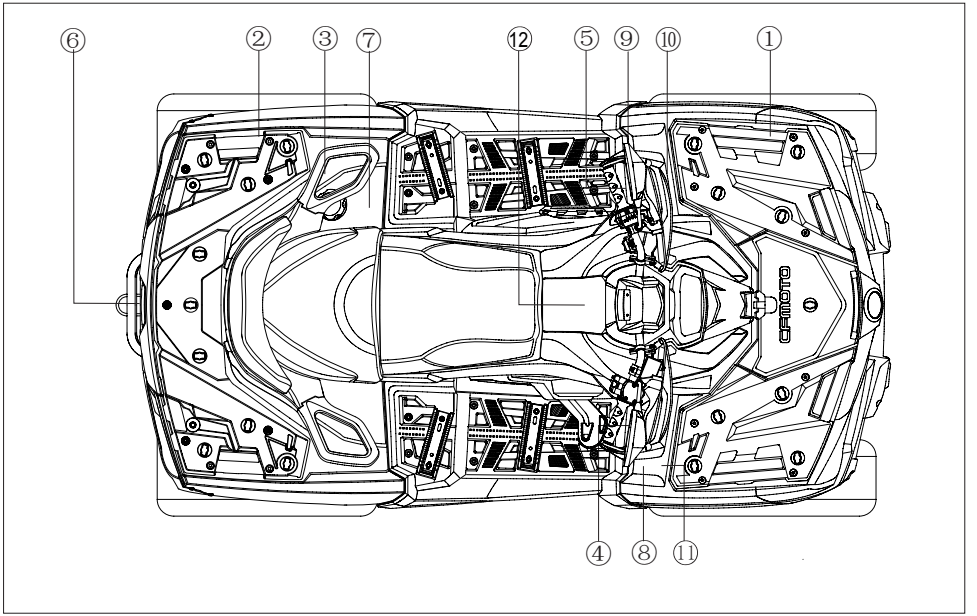

Safety decals and locations

①

⚠ WARNING

NEVER carry passengers on this carrier

MAXIMUM LOAD: 20 kg (44.1lbs)

②

⚠ WARNING

NEVER carry passengers on this carrier

MAXIMUM LOAD: 40 kg (88.2 lbs)

④

NOTICE

Check engine oil every 500 kilometers (310 miles)

Vérifier le niveau d'huile moteur tous les 500 kilomètres (310 miles)

905B-190413-US13C

③

⚠ WARNING

Improper loading of a trailer may cause loss of vehicle control, resulting in severe injury or death.

- Maximum unbraked towing mass **300**kg (**661** lbs).
- Maximum unbraked tongue mass **25** kg (**55** lbs).

9CRF-190101 EU179

⑤

⚠ WARNING

Passengers **under 12** are prohibited.Passenger should be well seated & hold tight the handgrip during public road operation.

Passenger seat could be used during public roads operation. Passenger seat shall not be used during field operation.

9GQ2-190101 EU169

⑥

⚠ WARNING

Never carry more than one passenger! Never drive with a passenger unless passenger seat is securely in place! Passenger must hold firmly the handgrips during riding!

⑦

WARNING

Improper tire pressure or overloading can cause loss of control.
Loss of control can result in severe injury or death.

- Cold tire pressure:
  Front: **6.5** psi(**45** kPa)
  Rear: **6.5** psi(**45** kPa)

9CR6-190101 EU1310

⑧

WARNING

Operating this ATV if you are under the age of **16** increases your chance of severe injury or death.

NEVER operate this ATV if you are under age **16**

7020-190101 1104

⑨

⚠ WARNING

Improper ATV use can result in SEVERE INJURY or DEATH.

ALWAYS USE AN APPROVED HELMET AND PROTECTIVE GEAR

NEVER USE WITH DRUGS OR ALCOHOL

NEVER operate :

- **without proper training or instruction.**
- **at speeds too fast for your skills or the conditions.**

ALWAYS :

- **use proper riding techniques to avoid vehicle overturns on hills and rough terrain and in turns.**
- **avoid paved surfaces-pavement may seriously affect handling and control.**

LOCATE AND READ OWNER'S MANUAL. FOLLOW ALL INSTRUCTIONS AND WARNINGS.

TMOM-NVMNMQ br NNMQ

⑩

DRIVE SELECT LEVER

- Read owner's manual carefully before operating.
- ATV MUST be stopped before shifting select lever.
- Shifting into or from reverse or park is impossible without applying rear brake

⑪

⚠ WARNING

Turning the vehicle in 4WD-LOCK ("DIFF.LOCK") takes more effort.

Operate at a slow speed and allow extra time and distance for maneuvers to avoid loss of control.

9010-190002 US1310

⑫

⚠ WARNING

NEVER attach here or on the lug-gage rack to pull a load This can cause the vehicle to tip over. AL-WAYS use the trailer hitch or the recovery hook to pull a load.

9CR0-190102 EU153

Safety decals and locations

Safe riding gear

Always wear clothing suited to the type of riding. Tractor riding requires special protective clothing for comfort and to reduce the chance of injury.

1. Helmet

Your helmet is the most important piece of protective gear for safe riding. An approved helmet can prevent a severe head injury.

2. Eye protection

Do not depend on sunglasses for proper eye protection. A pair of goggles or a helmet face shield offers the protection for your eyes. They should be kept clean and be a shatterproof design.

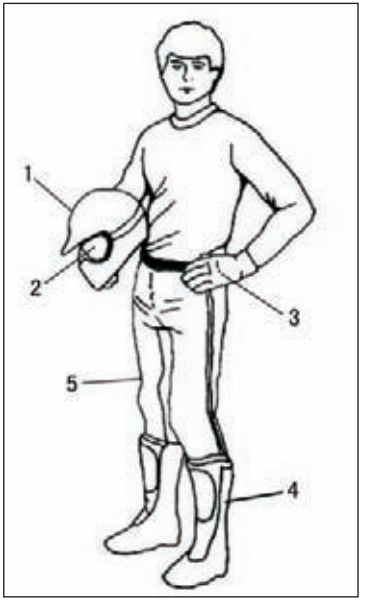

Safe riding gear

3. Gloves

Off-road style gloves with knuckle pads are the best for comfort and protection.

4. Boots

The best footwear is a pair of strong over-the-calf boots with heels, like motocross boots.

5. Clothing

Always wear long sleeves and long pants to protect arms and legs. Riding pants with kneepads and a jersey with shoulder pads provide the best protection.

⚠WARNING

Pressing the override button while the throttle is open can cause loss of control, resulting in severe injury or death. Always release the throttle before pressing the override button.

①Override Button

The engine is normally limited when operating in 4WD-LOCK

If conditions require more engine power in 4WD-LOCK:

Release the throttle and press the button to override the speed limiting function. While this button is depressed, the override indicator light will come on.

Release the button restores the speed limiting function.

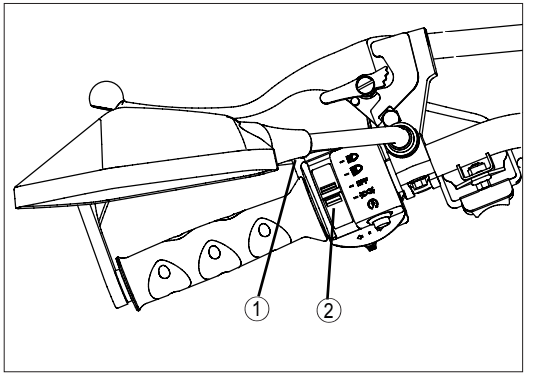

② Headlight Switch

The headlight switch consists of 3 positions: “ ≡◯ ” 、 “ ≡◯ ” 、 “ OFF ”.

≡◯: When the switch is at this position, Hi beam, front position light, daytime running light, license plate light and instrument light are on.

≡◯: When the switch is at this position, Lo beam, front position light, license plate light and instrument light are on.

OFF: When the switch is at this position, tail light, license plate light are off.

③ Turn Switch

Move the switch to ⇦ left turn light and left turn signal indicator are on.

Move the switch to ⇨ right turn light and right turn signal indicator are on.

④ Hazard Switch

Depress the button ⚠ front turn lights, rear turn lights and turn signal indicators on dashboard are on.

⚠ CAUTION

Don’t use the headlights with the engine turned off for more than 15 minutes. The battery may discharge to the point that the starter motor will not operate properly. If this should happen, remove the battery and recharge it.

⑤ Horn Button

Press this button, the horn will sound.

⑥ Engine Stop Switch

When the switch is at ⊗ position, the engine shuts off.

When the switch is at ◯ position, the engine can be started.

⑦ Starter Switch

When the main switch is turned to ON, and the engine stop switch is at ◯, push this button to start the engine.

● Brake

Front Brake Lever

The front brake lever ② is located on the right handlebar. Pull it toward the handlebar to apply the front brake.

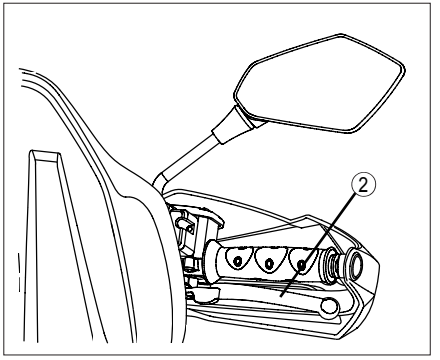

United Brake Pedal and Lever

The united brake pedal ① is located on the right side floor board of the vehicle. Push down on the pedal to apply both the front and united brakes. When squeezed, the lever or pedal should feel firm. A soft brake pedal would indicate a possible fluid leak or low master cylinder fluid level, which must be corrected before riding.
Brake lever ② is located on the right handlebar.
Contact your dealer for proper diagnosis and repairs.

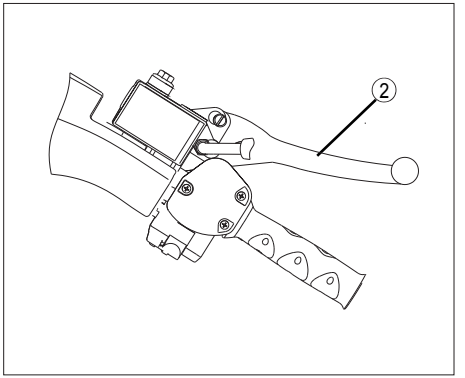

⚠WARNING

Operating the tractor with a spongy brake lever or pedal can result in loss of control, which could cause an accident. Never operate a spongy-feeling brake lever or pedal.

Always test brake lever travel master cylinder fluid level before riding. When squeezed, the lever or pedal should feel firm. Any sponginess would indicate a possible fluid leak or low master cylinder fluid level, which must be corrected before riding. Contact your dealer for proper diagnosis and repairs.

Brake Fluid

Check front brake fluid master cylinder fliud level before each use of the tractor.The front brake master cylinder is located on the right handlebar.
The brake fluid reservoir is near the right passenger footrest. The front brake fluid level can be viewed through an indicator window on the side of the master cylinder.When fluid level is lower than the ① "lower" mark, refill with the same type of brake fluid as necessary.

⚠WARNING

An over-full master cylinder may cause brake drag or brake lock-up, which could result in serious injury or death. Maintain brake fluid at the recommended level. Do not overfill.

Footbrake Fluid Level Check

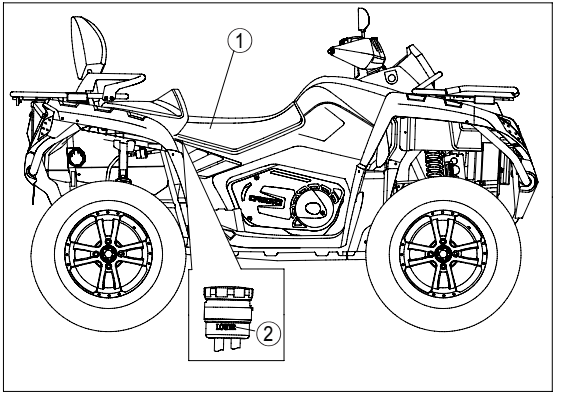

NOTE

Remove the seat ①, and then check the fluid level.
When checking the fluid level, the tractor must be on level ground with the handlebars straight. If fluid level is lower than the "lower" mark②, add DOT4 brake fluid.
Don't overfill.

⚠WARNING

Never store or use a partial bottle of brake fluid. Brake fluid is hygroscopic, meaning it rapidly absorbs moisture from the air. The moisture causes the drop of boiling temperature of the brake fluid, which can lead to early brake fade and the possibility of accident or severe injury. After opening a bottle of brake fluid, always discard any unused portion.

Features & Controls

Parking

To park the tractor, stop the engine, shift the gear selector Lever② into the park position.

（**CAUTION**：When shifting the transmission in PARK, always push the brake pedal）. Shake the vehicle forward and backward to verify that park is engaged.

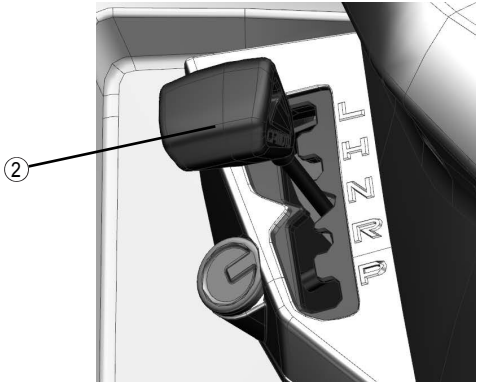

Important Safeguards

- Never depend on the parking feature alone if the tractor is parked on a hill. Always block the wheels on the downhill side of the tractor to prevent rolling.It's recommended to park the tractor on a level ground.

● Fuel Tank

Fuel tank cap is located at the rear of the vehicle. Open the fuel tank cap ① to fill fuel.

● Fuel safety

⚠WARNING

Gasoline is highly flammable and explosive under certain conditions.

- Always exercise extreme caution whenever handling gasoline.
- Always refuel with the engine stopped, and outdoors or in a well ventilated area.
- Never carry a plastic container with gasoline in the racks while riding. Static electricity between the rack and container could cause a spark.
- Do not smoke or allow open flames or sparks in or near the area where refueling is performed, or where gasoline is stored.
- Do not overfill the tank. Do not fill the tank neck.
- If gasoline spills on your skin or clothing, immediately wash it off with soap and water and change clothing.
- Never start the engine or let it run in an enclosed area. Engine exhaust fumes are poisonous and can cause loss of consciousness or death in a short time.

⚠WARNING

The engine exhaust from this product contains chemicals known to cause cancer, birth defects or other reproductive harm. Operate this vehicle only outdoors or in well-ventilated areas.

● Automatic Transmission Gear Selector

The transmission gear selector ① is located on the left side of the vehicle.

L: Low Gear

H: High Gear

N: Neutral

R: Reverse

P: Park

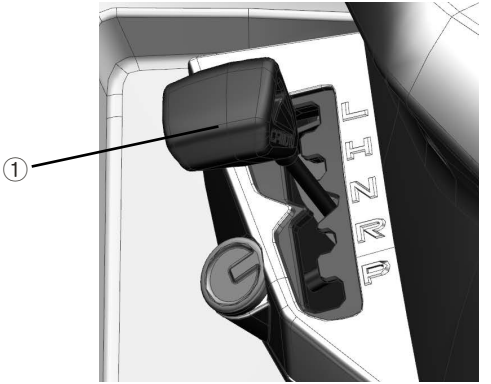

⚠ CAUTION

Shifting gears with the engine speed above idle or while the vehicle is moving could cause transmission damage. To change gears, stop the vehicle, and with the engine idling, move the lever to the desired gear. Push the brake pedal before attempting to shift into reverse or park. Whenever the tractor is left unattended, always place the transmission in the PARK position. Maintaining shift linkage adjustment is important to assure proper transmission function. See your dealer if you experience any shifting problems.

● Belt Life

To extend belt life, use low forward gear in heavy pulling situations and when operating at less than 7 miles per hour (11 kilometers per hour) for extended periods of time. If towing the vehicle is necessary, shift the transmission into neutral for better mobility and to prevent damage to the belt.

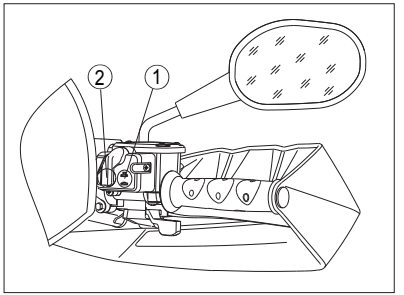

Features & Controls

● 'Four Wheel Drive' (4WD) System

This ATV is equipped with an on-command four-wheel drive switch “2WD” /” 4WD” ① and a front diff-lock switch “LOCK” /” 4WD” .

● Two-wheel drive（2WD） : Power is supplied to the rear wheels only.

● Four-wheel drive（4WD） : Power is supplied to the rear and frontwheels.

● Four-wheel drive with the front diff locked (4WD-LOCK) : Power is supplied to the rear and front wheels when the front diff is locked. Unlike the 4WD mode, all wheels turn at the same speed.

NOTE

- When the switch is set to “ LOCK ”, the front diff-lock indicator light will flash until the front diff is locked.
- When the indicator light is flashing, turning the handlebar left and right will help the front gear lock to engage.
- Riding before the front diff lock is properly engaged (e.g., when the indicator light is flashing) will cause the engine speed to be limited until engagement is complete.
- When the tractor is in 4WD-LOCK, the maximum traveling speed is limited to 30 km/h.
  If conditions require full engine power to be available, press the override switch to disable the 4WD-LOCK

● Throttle Lever ①

Once the engine is running, movement of the throttle lever will increase the engine speed. Regulate the speed of the machine by varying the throttle position. Because the throttle is spring loaded, the machine will decelerate, and the engine will return to an idle any time the hand is removed from the throttle lever. Before starting the engine, check the throttle to be sure it is operating smoothly. Make sure it returns to the idle position as soon as the lever is released.

⚠ CAUTION

Check the operation of the throttle lever before you start the engine. If it does not work smoothly, check for the cause. Correct the problem before riding the tractor. Consult your dealer if you can't find or solve the problem or solve the problem yourself.

Mechanical Speed Limiter ②

A mechanical speed limiter keeps the throttle from fully opening, even when the throttle lever is pushed to maximum travel. Turning in the screw limits the throttle lever travel, which reduces the maximum engine power available and decreases the maximum speed of the tractor.

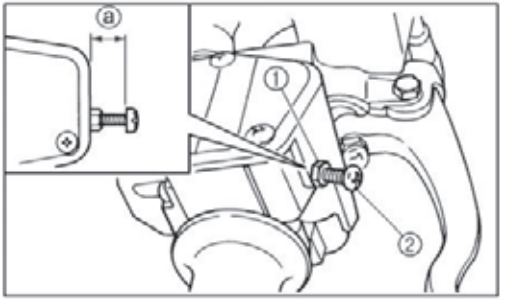

NOTE

Your tractor is set for maximum throttle opening from the factory.

⚠ CAUTION

Always loosen the locking nut ① before each adjustment. Do not turn the adjusting screw out more than ⓐ 12 mm (0.47 in). Always make sure the throttle lever free play remains adjusted to 3~5mm (0.12~0.20 in). Tighten the locking nut when the adjustment is completed.

Features & Controls

● Main Switch

The functions of the main key switch positions are as follows:

: All electrical circuits are switched on. The engine can be started at this position. The key cannot be removed in this position.

: All electrical circuits are switched off. The key can be removed in this position.

● Indicator and Warning Lights

Four–wheel–drive indicator

: This indicator comes on when the 2WD / 4WD switch is set to the "4WD" position.

: This indicator comes on when the 2WD / 4WD switch is set to the "4WD" and LOCK/4WD switch is set to LOCK.

: This indicator comes on when the 2WD / 4WD switch is set to the "2WD" position.

① Turning Indicators ⇦ ⇨

② Seat Belt Indicator Light **(Reserved function)**

③ High Beam Indicator:

This indicator light comes on when moving the head light switch to

④ EPS (optional) :

EPS Indicator:When the ATV is equipped with EPS system, the indicator light is on.

⑤ Engine Oil Pressure :

⑥**Neutral Indicator "N"**

This indicator light comes on when the gear selector is in the N position.

⑦ Coolant Temperature Gauge:

⑧ Parking Brake :

⑨ EFI Indicator :

This indicator light comes on when troubles occur in EFI system.

⑩ Override Indicator :

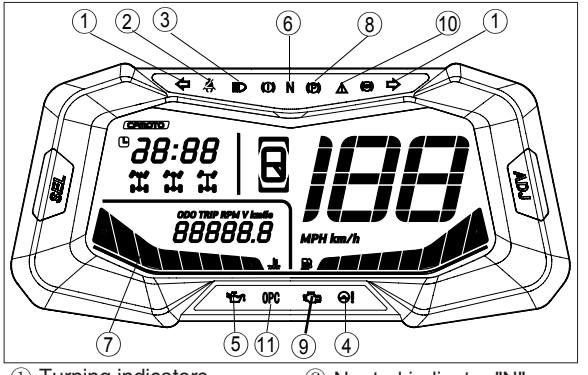

① Turning indicators
② Seat belt indicator light
③ High beam Indicator
④ EPS indicator
⑤ Engine oil pressure
⑥ Neutral indicator "N"
⑦ Coolant temperature gauge
⑧ Parking brake
⑨ EFI indicator
⑩ Override indicator
⑪ Operator presence control

This indicator light comes on when pressing the override switch. Always exercise caution to use override button.

⑪Operator Presence Control: OPC

Vehicle will alarm immediately once the driver leaves the seat when the engine is running.

Dashboard

① Wheel drive indicator:Corresponds to the drive method of the right handlebar. When it's in 2WD, it shows “ ”,
When it's in 4WD, it shows “ ”,
When it's in 4WD +LOCK, it shows “ ”.

Tip: Only after the drive method have been switched will the wheel light indicator will on because the front gear case has the synchronizing apparatus.

② Gear Indicators: L , H, N, R, P

③ Fuel gauge: show the gas remain in the tank, F means it's full, E means the standby gas . And when the petrol indicator enters the red area, it means the gas that remains can drive for 50km(31 miles) at most, and gas needs to be added as soon as possible.

④ Speed Indication Devices: Indicate the speed in number way, the method can switch between metric and inch.

⑤ Mileage Display: Indicate the mileage in number way,the work method can switch between kilometers and miles.

⑥ Coolant Temperature Gauge: Shows the current coolant temperature, C is the low temperature area, H is the high temperature area, Both overlow and overhigh are abnormal, idle warm machine is need when it's too cold, and park the bike when it's too hot to prevent the coolant from being boiling. Keep the coolant temperature in a normal range.

NOTE

If the ATV drive for a long time or in a slope with heavy load, it may lead to the engine overheat.

⑦ Clock indicator： Display the current time.

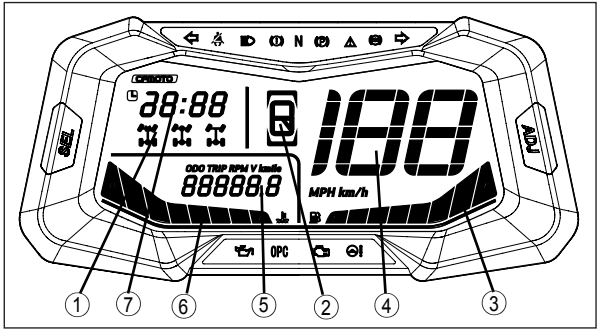

①Wheel drive indicator
② Gear Indicators
③Fuel gauge
④Speed Indication Devices
⑤Mileage display
⑥Coolant temperature gauge
⑦Clock indicator

⚠ CAUTION

- The engine may overheat if the ATV is overloaded. If this happens, reduce the load to specification.
- After restarting, make sure that the temperature indicator is in the green area of side C. Continuous use while the temperature indicator is in the red area of side H may cause damage to the engine.

Speedometer: shows the riding speed. In ODO mode , press and hold SEL to toggle between KM and MP.
Odometer / Trip/ Rpm / Hour / Volt / Brightness Display: This dashboard section can be toggled using the 'SEL' button to display the accumulated distance traveled in miles/kilometers; 'ODO' -The accumulated vehicle distance traveled, 'TRIP' - The trip distance traveled, 'RPM' – The engine speed in Revolutions Per Minute (RPM), 'H'-The engine hour meter records the engine running time, 'V' – Battery voltage, 'L-I-g-H—5' - Dashboard brightness (5 levels).
Fuel Gauge: Indicate the remaining amount of the gasoline in the fuel tank ."F"indicates the total amount of fuel is 19L .When the indicator reaches the first point of the red mark fuel ,should be refilled as soon as vpossible.The red mark indicates that the remaining fuel is only about 4.0L.

Operation

Break–In Period

The break–in period for your new ATV is very important Careful treatment of a new engine will result in more efficient performance and longer life for the engine. Perform the following procedures carefully.

⚠ CAUTION

Do not load or tow cargo during the first 600km of use, do not operate at full throttle. It may damage engine parts or decrease engine life if excessively increase throttle during the first 600km of use.

Do not run engine with throttle over 1/2 open during the first 300km of use. Do not run engine with throttle over 3/4 open during the first 300km to 600km of use.

Operate this ATV in normal condition after break–in period.

Use of any oils other than those recommended may cause serious engine damage. CFMOTO recommends the use of special oil for 4–stroke engine: SAE 15W/40 SG.

Operation

Perform the following procedures before operation:

1. Fill the fuel tank with gasoline.
2. Put ATV on a level surface to check the oil level. Add recommended oil if necessary to maintain the oil level between the minimum and maximum level marks of the dipsticks.
3. Drive slowly at first. Select an open area that allows room to familiarize yourself with vehicle operation and handling.
4. Vary throttle positions. Do not operate at sustained idle.
5. Perform regular checks on fluid levels, controls and areas outlined on the daily pre-ride inspection checklist.
6. Pull only light loads.
7. During the break–in period, change both the oil and oil filter at 20hours or 750km.

● Pre–Ride Inspection

⚠WARNING

If a proper inspection is not done before each use, severe injury, or death could result. Always inspect the vehicle before each use to ensure it is in proper operating condition.

Pre–Ride Checklist		
Item	**Remarks**	**See Page**
Brake system/ lever travel	Ensure proper operation	51, 117
Brake fluid	Ensure proper level	53
Front suspension	Inspect, lubricate if necessary	127
Rear suspension	Inspect, lubricate if necessary	127

Pre–Ride Checklist		
Item	**Remarks**	**See Page**
Steering	Ensure free operation	
Tires	Inspect condition and pressure	149
wheels / fasteners	Inspect, ensure fastener tightness	121
Frame nuts, bolts, fasteners	Inspect, ensure fastener tightness	
Fuel and oil	Ensure proper levels	96
Coolant level	Ensure proper levels	103
Coolant hoses	Inspect for leaks	
Throttle	Ensure proper operation	113
Gear shifting	Ensure proper operation	
Indicator lights/ switches	Ensure proper operation	64, 65

Pre–Ride Checklist		
Item	**Remarks**	**See Page**
Air filter	Inspect, clean	109
Air box sediment tube	Drain deposits whenever visible	
Headlamp	Check operation	125
Brake light/tail lamp	Check operation	126
Riding gear	Wear helmet, gloves, protective clothing	51

Starting the Engine

Starting a Cold Engine

⚠WARNING

Engine exhaust contains poisonous carbon monoxide and can cause loss of consciousness resulting in severe injury or death. Never run an engine in an enclosed area.

⚠CAUTION

Operating the vehicle immediately after starting could cause engine damage. Allow the engine to warm up for several minutes before operating the vehicle.

Starting a Cold Engine

1. Apply the united brake pedal.
2. Turn ignition switch to“ ”， turn stop switch to“ ON ”.
3. Shift gear selector into the neutral position.

NOTE

- When the gear selector is in neutral position, if indicator light on dashboard does not come on, ask your dealer to inspect its electric circuit or adjust gear-shifting system.
- Engine can be started in any gear if united brake pedal is applied. However it is recommended to shift into neutral or park before starting the engine.
- Completey close throttle lever and start the engine by pushing the start switch.
- If the engine fails to start, release the start switch, then push the start switch again. Pause a few seconds before the next attempt. Each cranking should be as short as possible to preserve battery energy. Do not crank the engine more than 10 seconds on each at tempt.
- If the battery is discharged, disassemble the battery to recharge.
- Continue warming up the engine until it idles smoothly before starting the tractor.

⚠ CAUTION

See the "Break-In Period" section prior to operating the engine for the first time.

Operation

- **Gear selector ① operation and reverse driving**

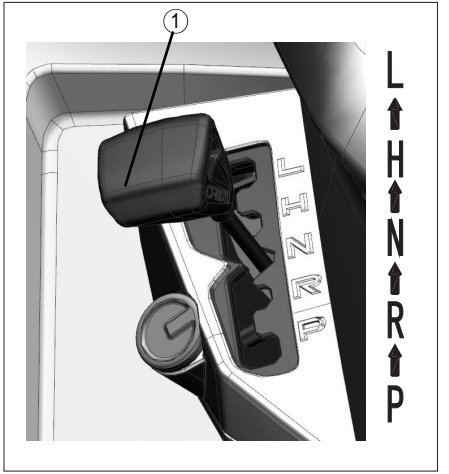

⚠ CAUTION

Before shifting, you must return the throttle lever to the closed position and stop the tractor. Otherwise, the transmission may may be damaged.

Shifting: Neutral to High

1. Return the throttle lever to the closed position and stop the tractor.
2. Push the button at the right side of gear selector, then shift to High by moving the gear selector along the shift guide.

NOTE

Make sure that the gear selector is completely shifted into position.

3. Open the throttle lever gradually.

Shifting: High to Low

1. Return the throttle lever to the closed position and stop the tractor completely.
2. Apply the united brake pedal, shift to Low by moving the gear selector along the shift guide.

Operation

Shifting: Low to High

1. Return the throttle lever to the closed position and stop the tractor completely.
2. Push the button at the right side of gear selector, then shift to High by moving the gear selector along the shift guide.

Shifting: Neutral(N) to Reverse;

NOTE

The gear selector cannot be shifted into reverse (R) without applying the united brake.

1. Return the throttle lever to the closed position and stop the tractor completely.
2. Apply the united brake pedal, push the button at the right side of gear selector.
3. Shift the gear from neutral (N) to reverse by moving the gear selector along the shift guide.

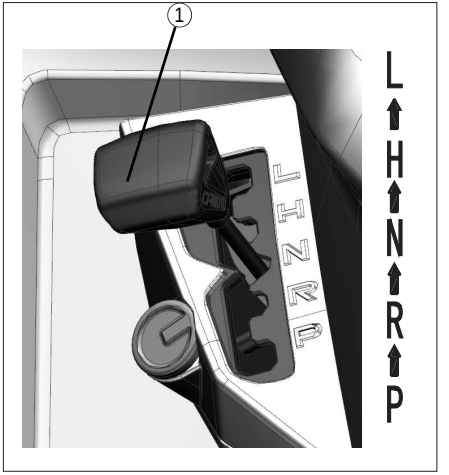

NOTE

3.1 When in reverse, the reverse indicator light should be on.

3.2 The indicator light should be on in accordance with actual gear position , if the light does not come on, ask your dealer to inspect.

3.3 Due to the synchronizing mechanism in the engine , the light may not come on until tractor start moving.

4. Check behind for people or obstacles, then release the united brake pedal.

5. Open the throttle lever gradually and continue to watch rear while moving backward.

⚠WARNING

When you shift into reverse , make sure there are no obstacles or peois safeple behind you. When it is safe to proceed, go slowly.

Shifting：Reverse to Park

1. Return the throttle lever to the closed position and stop the tractor completely.
2. Apply the united brake pedal.
3. Shift from reverse to park by moving the gear selection along the shift guide.

● HAULING CARGO

⚠WARNING

Overloading the vehicle, carrying or towing cargo improperly, can alter vehicle handling and may cause loss of control or brake instability. Always follow these precautions when hauling cargo:

- Never exceed the stated load capacity for this vehicle.
- Reduce speed.
- When operating over rough or hilly terrain, reduce speed and cargo to maintain stable driving coditions
- Weight distribution in the rear rack should be as far forward and as low as possible. Carrying a high load raises the center of gravity and creates a less stable operating condition. Reduce load weight when cargo is high. When handling off-centered loads that cannot be centered, secure the load and operate with extra caution.
- All loads must be secured before operation. Unsecured loads may shift and create unstable operating conditions. which could result in loss of control of the vehicle. Always be sure that the rear rack is lowered.

Operation

- When operating with loads extending beyond the rack. Stability and maneuverability may be adversely affected, causing the machine to overturn.
- Carrying a load on only the front rack or the rear rack may cause an imbalanced condition and increase the possibility of vehicle overturn. Balance loads proportionally between the front rack and the rear rack, but do not exceed the stated load capacity.
- Use extreme caution when applying brakes with a loaded vehicle. Avoid terrain or situations that may require backing downhill.
- Always attach the tow to the hitch point.
- The vehicle should never exceed 10 mph (16 km/h) while towing a load on a level surface. Vehicle speed should never exceed 5mph (8 km/h) when towing loads in rough terrain, while cornering, or ascending, or descending a hill.
- Do not obstruct the headlight when loading the front rack.
- Always use low gear when towing or carrying loads.

Load Distribution

Your ATV has been designed to carry or tow a certain amount of load. Always read and understand the the load distribution warnings listed on the warning labels, and never exceed the specified weights. Cargo weight should be mounted as low as possible. When operating over rough or hilly terrain, reduce speed and cargo to maintain stable driving conditions.

Operation

1. Always load the cargo as far forward as possible.
2. Always operate the vehicle with extreme caution whenever hauling or towing loads. Balance, handling, and control may be affected.
3. Slow down.

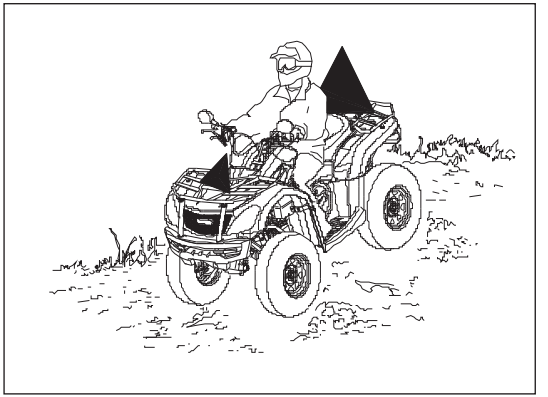

Driving Safely

Driving Procedures

1. Sit upright with both feet on the footrests and both hands on the handlebars.
2. Start the engine and allow it to warm up, apply the brakes, then shift the transmission into gear.
3. Check your surroundings and determine your path of travel.
4. Release the brakes.

Operation

5. Slowly depress the throttle with your right thumb and begin driving. Vehicle speed is controlled by the amount of throttle opening.
6. Drive slowly. Practice maneuvering and using the throttle and brakes on level surfaces.

Making Turns

To make a turn, steer in the direction of the turn, leaning your upper body to the inside of the turn while supporting your weight on the outer footrest. This technique alters the balance of traction between the wheels, allowing turn to be made smoothly. The same leaning technique should be used for turning in reverse.

NOTE

Practice making turns at slow speeds before attempting to turn at faster speeds.

⚠WARNING

Turning at sharp angles or at excessive speeds can result in vehicle overturn and lead to serious injury. Avoid turning at sharp angles. Never make turns at high speeds.

Operation

Driving on Slippery Surfaces

Whenever riding on slippery surfaces such as wet trails or loose gravel, or during freezing weather, follow these precautions:

1. Slow down when entering slippery areas.
2. Maintain a high level of alertness, reading the trail and avoiding quick, sharp turns which can cause skids.
3. Correct a skid by turning the handlebars in the direction of the skid and shifting your body weight forward.
4. Driving with 4WD engaged can assist in controlling the vehicle in slippery areas.

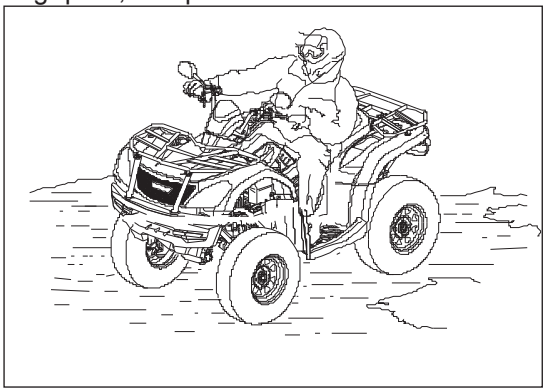

⚠ CAUTION

Severe damage to drive train may occur if the 4WD is engaged while the wheels are spinning.
Always engage 4WD when the wheels have traction or are at rest.

⚠ WARNING

Failure to exercise care when operating on slippery surfaces can result in loss of tire traction and cause loss of control, accident, and serious injury or death. Never apply the brakes during a skid. Do not operate on excessively slippery surfaces. Always reduce speed and use additional caution.

Operation

Driving Uphill

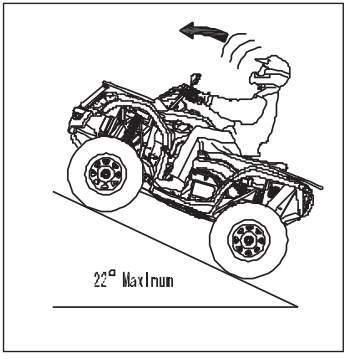

Whenever traveling uphill, follow these precautions:

1. Always travel straight uphill.
2. Avoid steep hills (22° maximum).
3. Keep both feet on the footrests.
4. Shift your weight forward.
5. Proceed at a steady rate of speed and throttle opening.
6. Remain alert and be prepared to take emergency action. This may include quick dismounting of the vehicle.

If all forward speed is lost:

Keep your weight uphill.

Apply the front brake. When fully stopped, apply brake as well, then shift gear selector into park position.

If the tractor begins rolling backwards:

Keep your weight uphill. Never apply engine power. Never apply the brake while rolling backwards. Apply the front brake. When fully stopped, apply the brake as well, and then shift gear selector into park position. Dismount on uphill side, or to either side if tractor is pointed straight uphill. Turn the tractor around and remount. .

Operation

⚠WARNING

Braking and handling are greatly affected when operating in hilly terrain. Improper procedure could cause loss of control or overturn and result in serious injury or death.

Avoid climbing steep hills (22°maximum).

Use extreme caution when operating on hills, and follow proper operating procedures outlined in the owner's manual.

Sidehilling

⚠WARNING

Improperly crossing hills or turning on hills can result in loss of control or vehicle overturn, resulting in severe injury or death. Avoid crossing the side of a hill when possible. Follow proper procedures as outlined in the owner s manual. Sidehilling can be a dangerous type of driving and should be avoided if at all possible. If you do enter into a situation where sidehilling is necessary, follow these precautions:

1. Slow down.
2. Lean into the hill, transferring your upper body weight toward the hill while keeping your feet on the footrests.

Operation

3. Steer slightly into the hill to maintain vehicle directions.

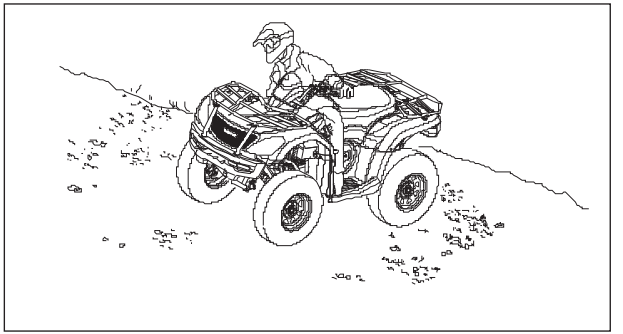

NOTE

If the vehicle begins to tip, quickly turn the front wheel downhill, if possible, or dismount on the uphill side immediately!

Driving Downhill

Whenever descending a hill, follow these precautions:

1. Proceed directly downhill.
2. Shift your weight to the rear of the vehicle.
3. Slow down.
4. Apply the brakes slightly to aid in slowing. Familiarize yourself with operation of the brake lever.

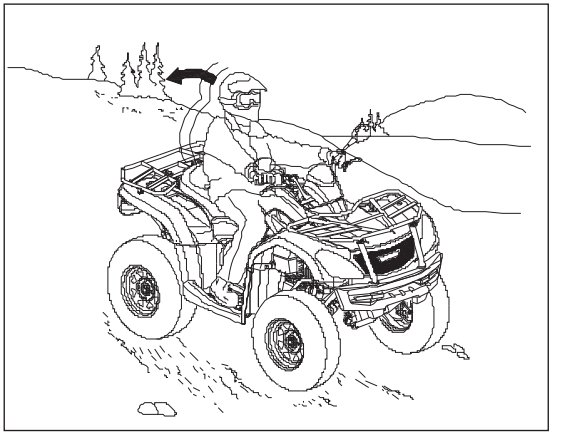

Operation

⚠WARNING

Excessive speed can cause loss of control and lead to serious injury or death. Always operate slowly when traveling downhill.

Turning Around on a Hill

⚠WARNING

Improper hill climbing procedures could cause loss of control or overturn and result in serious injury or death. Avoid climbing steep hills (22°maximum).

Use extreme caution when operating on hills, and follow proper operating procedures outlined in the owner's manual. If the vehicle stalls while climbing a hill, never never back it down the hill!

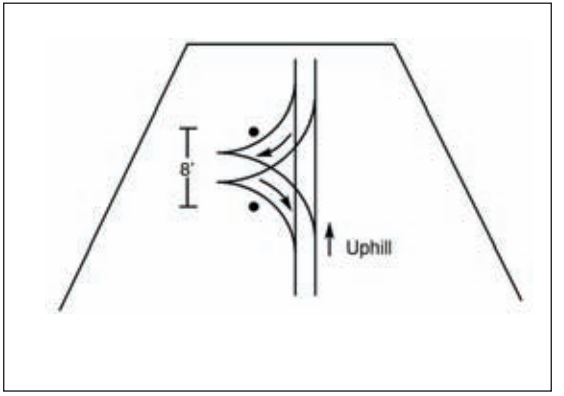

One maneuver that can be used when it s necessary to turn around while climbing a hill is the K-turn:

1. Release the throttle, then apply the hand and foot brake while keeping your body weight uphill.
2. Shift the gear selector lever to the low gear position. Shut off the engine.
3. Keeping the hand brake applied, dismount on the uphill side of the vehicle, or on the right side if the vehicle is pointing straight uphill.

4. Keeping the hand brake applied and staying uphill of the vehicle, turn the handlebars full left (front brake will be closest to you).
5. Slowly releasing the hand brake lever, allow the vehicle to roll around to the right until it's pointing across the hill or slightly downward.
6. Keeping the hand brake applied, remount the vehicle from the uphill side and shift the gear selector lever to the parking position, keeping your body weight uphill.
7. Restart the engine. Press the foot brake, and shift the gear selector lever to low gear position.
8. Release the brakes and proceed slowly downhill, controlling speed with the brakes, until the vehicle is on more level ground.

Driving Through Water

Your tractor can operate through water with a maximum recommended depth equal to the bottom of the footrests. Follow these procedures when operating through water:

1. Determine water depths and current before crossing.
2. Choose a crossing where both banks have gradual inclines.

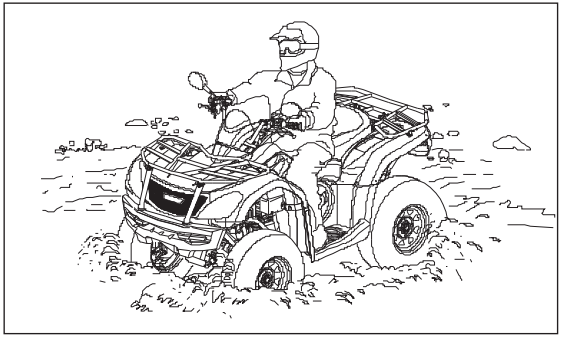

Operation

3. Proceed slowly, avoiding rocks and obstacles if possible.
4. After crossing, dry the brakes by applying light pressure to the lever while driving slowly until braking action is normal.

NOTE

Avoid operating the vehicle through deep or fast-flowing water. If you cannot avoid water that exceeds the recommended maximum depth, go slowly, balance your weight carefully, avoid sudden movements, and maintain a slow and steady forward motion. Do not make sudden turns or stops, and do not make sudden throttle changes.

After running the vehicle in water, it's critical to have it serviced as outlined in the maintenance chart.
The following areas need special attention: engine oil, trasmission oil, front and rear gear cases and all grease fittings.

NOTE

If water has been ingested into the CVT housing, the drive belt will likely slip and poor performance will result. To expel water and dry the CVT housing; Drain the CVT housing, place the vehicle in neutral, and raise the engine rpm for several minutes to dry the CVT components. Release the throttle and shift into low gear, then test the performance of the vehicle. Repeat as necessary until you are satisfied all the water has been expelled. Contact your dealer if vehicle performance issues continue.

Operation

⚠WARNING

Major engine damage can result if the vehicle is not thoroughly inspected after operation in water.

Perform the services outlined in the maintenance chart.

If your vehicle becomes immersed or is operated in water that exceeds the footrest level, take it to your dealer for service before starting the engine.

Driving Over Obstacles

Be alert! Look ahead and learn to read the terrain. Be constantly alert for hazards such as logs, rocks and low hanging branches.

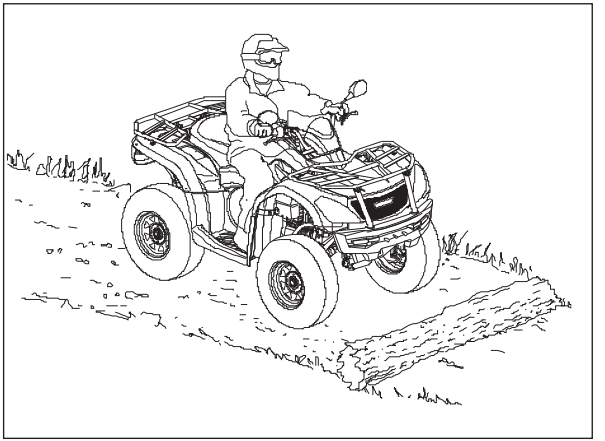

⚠WARNING

Severe injury or death can result if your vehicle comes in contact are immediately visible.

Travel with caution in unfamiliar terrain.

Operation

Driving in Reverse

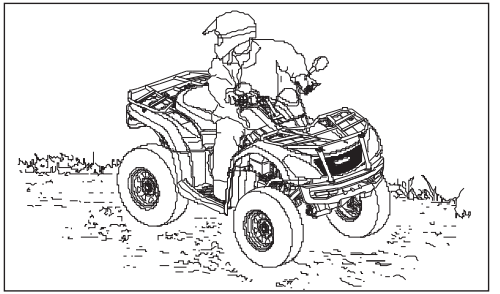

Follow these precautions when operating in reverse:

1. Always avoid backing downhill.
2. Back slowly.
3. When in reverse, apply the brakes lightly for stopping.
4. Avoid turning at sharp angles in reverse.
5. Never open the throttle suddenly while backing.

⚠WARNING

Failure to use caution when operating in reverse can result in serious injury or death. Before shifting into reverse, always check for obstacles or people behind the vehicle. When it's safe to proceed, back slowly. Do not use the override switch unless additional power is required for vehicle movement. Use with caution. Avoid backing on inclines, and avoid turning at sharp angles.

NOTE

Your ATV is equipped with a reverse speed limiter. The override button should be used with caution as rearward vehicle speed is greatly increased. Do not operate at wide open throttle. Open the throttle just enough to maintain a desired speed.

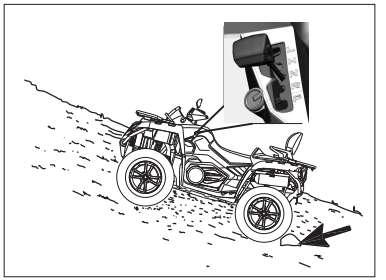

Operation

⚠WARNING

Excessive throttle operation while in the speed limit mode may cause fuel to build in the exhaust, resulting in engine popping and/or engine damage.

The rear output shaft is locked when the transmission is in the parking position.

Parking on an Incline

Avoid parking on an incline if possible. If it's unavoidable, follow these:

1. Turn the engine off.
2. Place the gear selector to parking position.
3. Always block the rear wheels on the downhill side as illustrated.

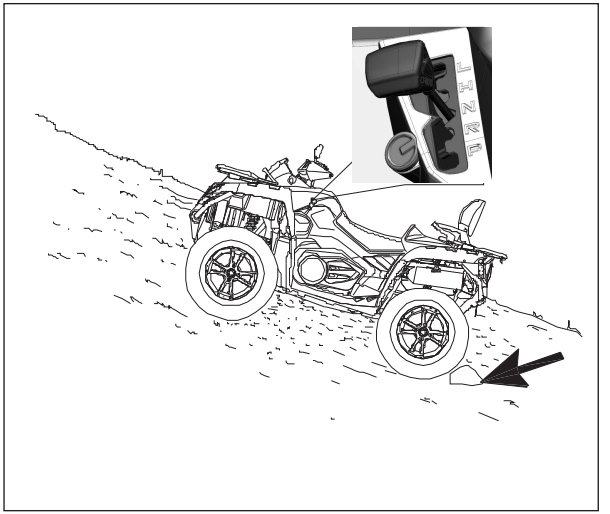

TURNING YOUR TRACTOR

To achieve maximum traction while riding in 2WD or 4WD, the two rear wheels are mounted solidly on one axle and turn together at the same speed. Furthermore, when riding in 4WD-LOCK（DIFF.LOCK）, the front wheels also turn together at the same speed. Therefore, unless the wheel on the inside of the turn is allowed to slip or lose some traction, the tractor will resist turning. A special turning technique must be used to allow the tractor to make turns quickly and easily. It is essential that this skill be learned first at low speed.

⚠WARNING

Always follow proper procedures for turning as described in this Owner's Manual. Practice turning at low speeds before attempting to turn at faster speeds. Do not turn at speeds too fast for your skills or the conditions. Operate Operate at a slow speed and allow extra time and distance for maneuvers when in 4WD-LOCK (DIFF.LOCK).

As you approach a curve, slow down and begin to turn the handlebars in the desired direction. As you do so, put your weight on the footboard to the outside of the turn (opposite your desired direction) and lean your upper upper body into the turn. Use the throttle to maintain an even speed through the turn.

This maneuver will let the wheel on the inside of the turn slip slightly, allowing the tractor to make the turn properly.

Operation

This procedure should be practiced at slow speed many times in a large area with no obstacles. If an incorrect technique is used, your tractor may continue to go straight. If the tractor doesn't turn, come to a stop and then practice the procedure again. If the riding surface is slippery or loose, it may help to position more of your weight over the front wheels by moving forward on the seat. Once you have learned this technique you should be able to perform it at higher speeds or in tighter curves. Improper riding procedures such as abrupt throttle changes, excessive braking, incorrect body movements, or too much speed for the sharpness of the turn may cause the tractor to tip. If the tractor begins to tip over to the outside while negotiating a turn, lean more to the inside. It may also be necessary to gradually let off on the throttle and steer to the outside of the turn to avoid tipping over.

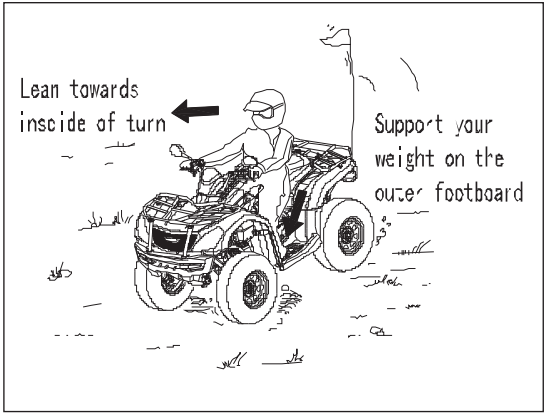

Remember: Avoid higher speeds until you are thoroughly familiar with the operation of your tractor.

Accessories

Auxiliary power outlets provide 12V power for operating accessories such as hand held spot lights.

Please consult with your dealer.

Periodic maintenance chart

Careful periodic maintenance will help keep your vehicle in the safest, most reliable condition.
Inspection, adjustment and lubrication of important components are explained in the periodic maintenance chart. Inspect, clean, lubricate, adjust, and replace parts as necessary. When inspection reveals the need for replacement parts, please use genuine parts available from your dealer.

NOTE

Service and adjustments are critical. If you are not familiar with safe service and adjustment procedures, have a qualified dealer perform these operations.

Maintenance intervals in the following chart are based upon average riding conditions and an average vehicle speed of approximately 10 miles or 20 km per hour. Vehicles subjected to severe use must be inspected and serviced more frequently.

Severe use definition

- Frequent immersion in mud, water or sand
- Racing or race-style high RPM use
- Prolonged low speed, heavy load operation
- Extended idle
- Short trip cold weather operation

Pay special attention to the oil level. A rise in oil level during cold weather can indicate contaminants collecting. in the oil sump or crankcase. Change oil immediately if the oil level begins to rise. Monitor the oil level, and if it continues to rise, discontinue to use and determine the cause or see your dealer.

Maintenance & Lubrication

Maintenance Procedures

Engine oil

Always check and change the engine oil at the intervals outlined in the Maintenance Schedule.

Engine oil check

1. Place the tractor on a level surface.
2. Start the engine and let it idle for 20~30 seconds. Stop the engine.
3. Wait a short period for the oil to settle.
4. Remove access cover ① by grasping the lower left portion and pulling firmly.
5. Unscrew the oil dipstick ② out and wipe off with a clean cloth.
6. Insert the dipstick into the oil filler hole. Do not reinstall it.
7. Remove the dipstick again and check the oil level indication. Maintain the oil level between the upper and lower indicators.
8. Reinstall the dipstick into the oil filler hole, hand-tighten it, and reinstall the access cover.

NOTE

Access cover grommets may come loose. Ensure they are in place before reinstalling the cover.

Engine oil change

1. Place the tractor on a level surface.
2. If the engine was running, wait a sufficient period for the oil to settle and cool.
3. Place an oil pan under the engine to collect the used oil.
4. Remove the engine oil drain bolt ① and drain the oil from the transmission.
5. Place a new sealing washer on the engine oil drain bolt, then assemble and tighten the drain bolt.

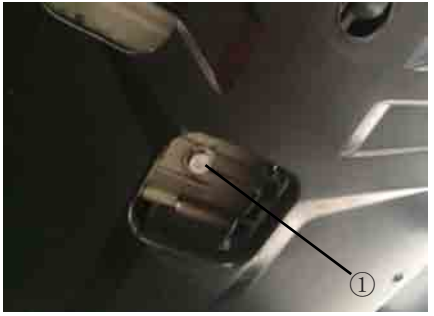

Oil filter replacement

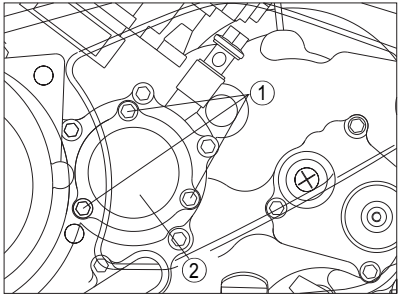

1. Use wrench to unscrew 3 pcs of bolts ① as right picture shows. Then remove cover ② of oil filter and remove oil filter ③.
2. Install new oil filter on it.

Attention: Confirm if O-ring ④ is good and then install it into groove of crankcase correctly.

3. Install new oil filter ③, and use wrench to tighten 3 pcs of bolts ① on cover ② by specified torque.

NOTE: Tightening torque of bolt ①: 10 N • m

4. Use new washer to assemble and tighten oil drain bolt as specified torque.

NOTE: Tightening torque of drain bolt: 25 N • m

5. Add the specified amount of recommended engine oil, and then insert the engine oil dipstick and tighten it.

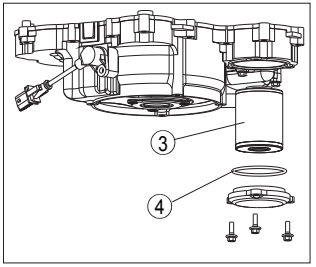

NOTE:

In case of engine overhaul, oil should be added: 2.6 L;
With oil filter cartridge replacement, oil should be added: 2.5L

6. Start the engine and warm it up for several minutes. While warming up, check for oil leakage. If oil leakage is found, turn the engine off immediately and check for the cause.
7. Turn the engine off, and then check the oil level and correct it if necessary.

Transmission Oil

Always check and change the transmission oil at the intervals outlined in the Periodic Maintenance Chart. CFMOTO recommends the use of SAE 75W/90 GL-5 Transmission Fluid.

Oil Check

1. Place the tractor on a level surface.
2. Remove access cover ① by grasping the lower left portion and pulling firmly.
3. Unscrew the oil dipstick ② out and wipe off with a clean cloth.
4. Insert the dipstick into the oil filler hole. Do not reinstall it.
5. Remove the dipstick again and check the oil level indication. Maintain the oil level between the upper and lower indicators.
6. Reinstall the dipstick into the oil filler hole, hand-tighten it, and reinstall the access cover.

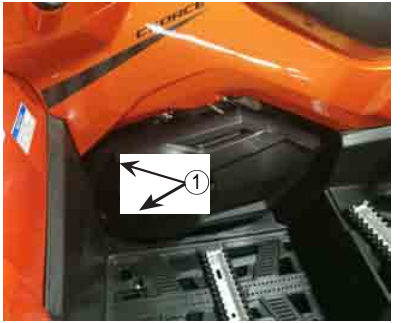

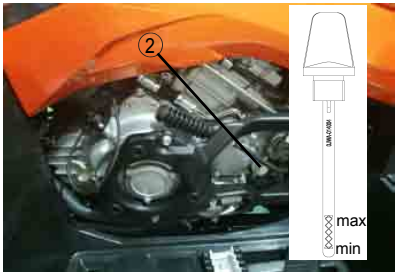

Transmission oil change

1. Place the ATV on a level surface.
2. If the engine was running, wait a sufficient period for the oil to settle and cool
3. Place an oil pan under the engine to collect the used oil.
4. Remove the oil dipstick ②.
5. Remove the oil drain bolt ① and drain the oil.
6. Place a new sealing washer on the oil drain bolt, then assemble and tighten the drain bolt.

NOTE: Remove oil dipstick ② first, then remove drain bolt ① , in case the gear oil spill out.
Tightening torque of drain bolt ① : 25 N•m

Maintenance & Lubrication

Rear gear case oil

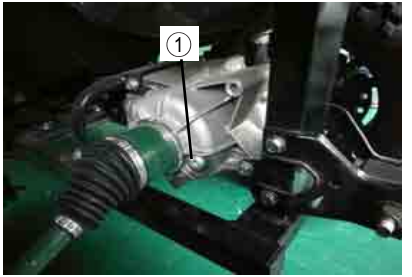

The rear gear case must be checked for oil leakage before each ride. If any leakage is found, have your dealer check and repair the tractor.

Rear gear oil change

1. Place the machine on a level place.
2. Place a container under the rear gear case to collect the used oil.
3. Remove oil drain bolt ① as right picture shows and drain used oil.
4. Add recommended gear oil into rear gear case.
5. Install and tighten drain bolt as specified torque after adding new gear oil.

NOTE

Tightening torque of drain bolt: 23N·m

Periodic oil change: 0.40 L

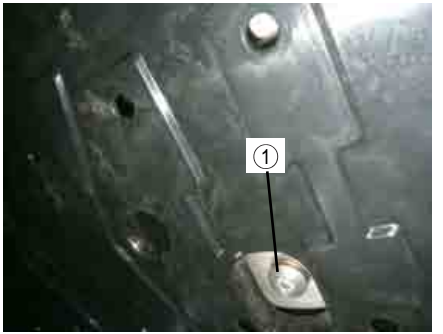

6. Check if any oil leakage. In case of leakage, please find causes and remove it

NOTE: Be sure no foreign material enters the rear gear case.

Front gear case oil measurement

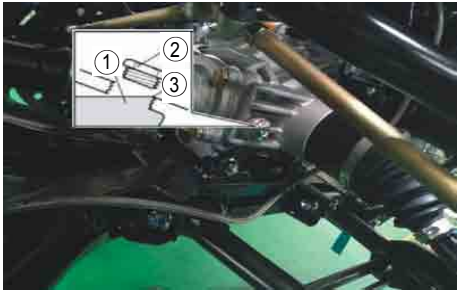

1. Place the machine on a level place.
2. Remove the oil filler bolt ② and check the oil level ①. It should be up to the brim of the hole③. If the level is low, add sufficient oil to raise it to the specified level.
3. Install the oil filler bolt and tighten it to the specified torque.

NOTE Oil filler bolt tightening torque：23 N • m

Front gear case oil change

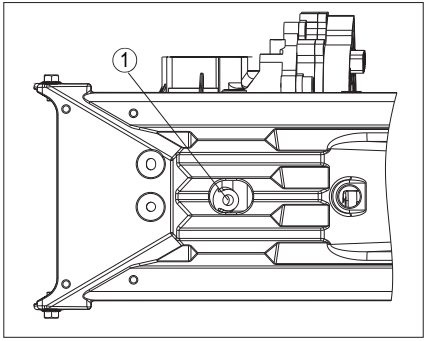

1. Place the machine on a level place.
2. Place a container under the front gear case to catch the oil.
3. Remove oil filler bolt and drain bolt ① at the bottom of front gear case, and drain used oil.
4. Install the drain bolt and tighten it to the specified torque.

NOTE

Drain bolt tightening torque: 10 N · m

5. Fill the front gear case with oil.

NOTE

Periodic oil change：0.23 L

6. Install the filler bolt ② and tighten it to the specified torque.
7. Check for oil leakage. If oil leakage is found, check for the cause.

Maintenance & Lubrication
Cooling system
Coolant level check

1. Place the tractor on a level surface.
2. Coolant reservoir ① is located on the front left of the vehicle.
   Check the coolant level in the coolant reservoir when the engine is cold as the coolant level will vary with engine temperature.

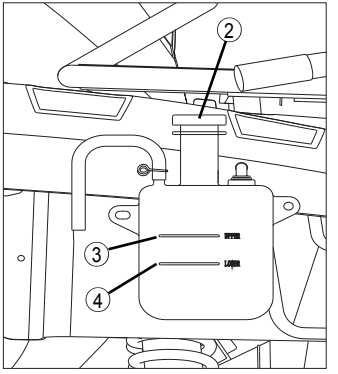

② Reservoir cap
③ Upper limit mark
④ Lower limit mark

NOTE

The coolant should be between the upper ③ and lower ④ limit marks.

3. If the coolant is at or below the lower limit mark, remove the reservoir cap ②, add coolant to the upper limit mark, install the reservoir cap, and then install the panel.

NOTE

Lowest capacity of coolant reservoir：0.2 L

⚠ CAUTION

Hard water or salt water is harmful to the engine. You may use soft water if you can not get distilled water.

CAUTION

If water is added, have your dealer check the antifreeze content of the coolant as soon as possible.

The radiator fan operation is completely automatic. It is switched on or off according to the coolant temperature in the radiator.

Changing the coolant

1. Place the tractor on a level surface.
2. Place a container under the engine, and then remove the coolant drain bolt ①. (Use a trough or a similar object to prevent coolant from spilling on the footrest.)
3. Remove the radiator cap.
4. Remove the coolant reservoir cap.

⚠ DANGER

After stop the engine, you cannot remove cap of radiator immediately. Wait for a while to cool down the coolant and then remove radiator cap. Otherwise hot coolant will goes out to hurt people nearby.

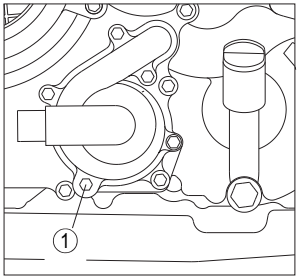

5. Disconnect the hose on the coolant reservoir side, and then drain the coolant from the coolant reservoir.
6. After draining the coolant, thoroughly flush the cooling system with clean tap water.
7. Replace the coolant drain bolt washer if it is damaged, and then tighten the coolant drain bolt to the specified torque.

NOTE

Coolant drain bolt tightening torque：10 N•m

8. Install the coolant reservoir hose.
9. Fill the recommended coolant into the radiator until it is full. When filling coolant, at the same time to loosen tapping screw as right picture ① shows in order to drain potential air bubbles inside the coolant hose, until coolant goes out, then tighten the screw .

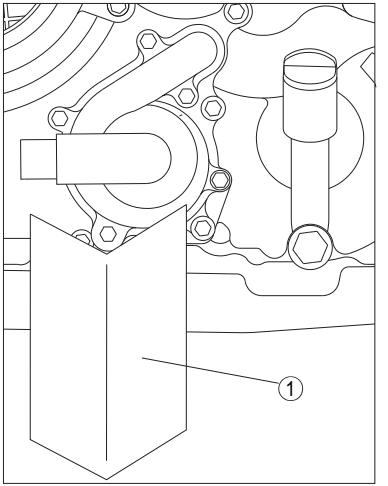

NOTE

Recommended antifreeze:
High quality ethylene glycol antifreeze containing corrosion inhibitors for aluminum engines. Antifreeze and water mixing ratio:1:1
Coolant capacity: 3.0 L
Coolant change：2.9 L
Coolant reservoir capacity：0.38L~0.6L

⚠ CAUTION

Hard water or salt water is harmful to the engine.
Please use CFMOTO recommended coolant.

10. Install the radiator cap.
11. Start the engine and let it idle for several minutes. Stop the engine, and then check the coolant level in the radiator. If it is low, add more coolant until it reaches the top of the radiator.
12. Fill the coolant reservoir with coolant up to the upper limit.
13. Install the coolant reservoir cap and check for coolant leakage.

NOTE

If any leakage is found, have your dealer check the cooling system.

14. Install the panels and the front rack.

- **Axle dust boots ①**

Check the protective boots for holes or wears.
If any damage is found, have them replaced by your dealer.

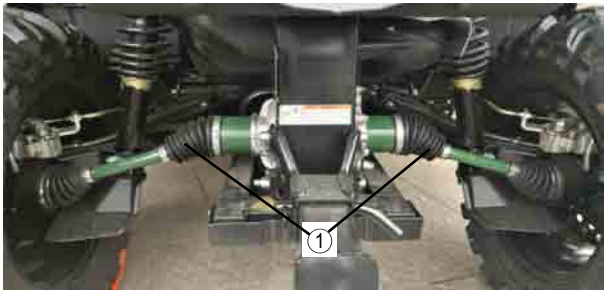

• Spark plug inspection

Removal

1. Remove the panel.
2. Remove the spark plug cap
3. Use the spark plug wrench in the tool kit to remove the spark plug as shown.

Inspection

The spark plug is an important engine component and is easy to inspect. The condition of the spark plug can indicate the condition of the engine. The ideal color on the white insulator around the center electrode is a medium-to-light tan color for a tractor that is being ridden normally. Do not attempt to diagnose such problem yourself. Instead, take the tractor to dealer. You should periodically remove and inspect the spark plug because heat and deposits will cause the spark plug to slowly break down and erode. If electrode erosion becomes excessive, or if carbon and other deposits are excessive, you should replace the spark plug with the specified plug.

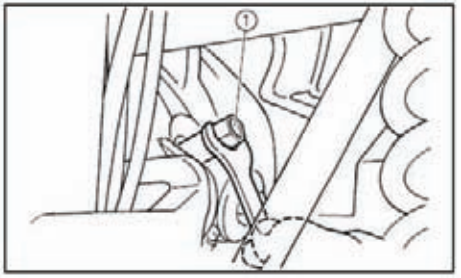

NOTE：Specified spark plug：DCPR8E (NGK)

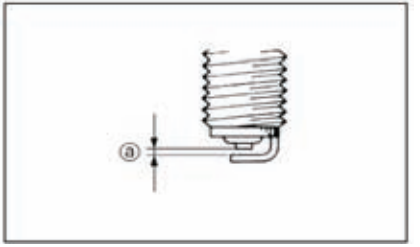

Installation

Measure the electrode gap with a wire thickness gauge and, if necessary, adjust the gap to specifications.

NOTE：Spark plug gap：0.8 mm ~ 0.9 mm

2. Clean the gasket surface. Wipe off any grime from the threads.
3. Install spark plug and tighten to specified torque.

NOTE：Tightening torque of spark plug：20N・m

If a torque wrench is not available when you are installing a spark plug, a good estimate of the correct torque is 1/4 to 1/2 turn past finger tight. Have the spark plug tightened to the specified torque as soon as possible.

4. Install the spark plug cap.
5. Install the panel.

● Air filter element cleaning

There is a check hose ① at the bottom of the air filter housing. If dust or water can be viewed in this hose, empty the hose and clean the air filter housing thoroughly. If the vehicle was submerged, please contact your local dealer to check for water inside the engine crankcase.

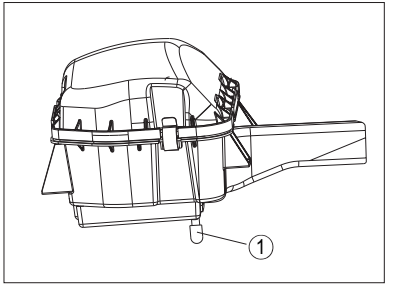

Air filter maintenance

1. Remove the seat.
2. Remove the filter housing cover by pulling out each side at the rear of the cover to disengage the plastic latches, then lift up and pull back to remove it.
3. Remove the cover spring clips ② and remove the filter housing cover ③.
4. Loosen the air filter clamp ④ and remove the air filter ⑤.
5. Remove the foam pre-filter ⑥ from the air filter.
6. Wash the foam pre-filter gently with soap and water, and allow it to completely dry.

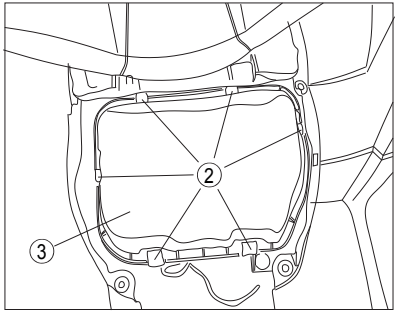

7. Inspect the paper air filter and verify it is okay to reinstall. Softly brush off accumulated dust if necessary. Install a new filter as necessary.

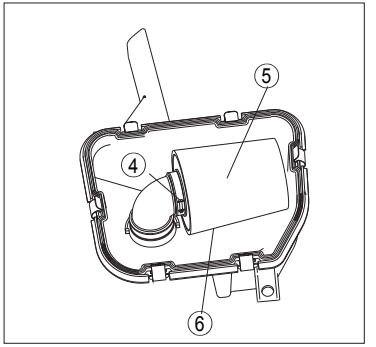

CAUTION

Don't use liquid to wash paper filter element.

8. Install the pre-filter onto the air filter. Apply a thin film of lubricant on the inside diameter of the air filter rubber seal.
9. Install the air filter and clamp onto the air filter housing inlet. Tighten the clamp securely.
10. Reinstall the air filter housing cover and spring clips. Verify the cover is installed correctly and is sealing properly.

NOTE

During normal use, the air filter media should be inspected every 25 hours or 750km. The air filter should be replaced every 1500km. The air filter must be checked and replaced more often if the machine is operated in extremely dusty areas or if it becomes wet. Each time air filter maintenance is performed, check the air inlet to the air filter box for obstructions, the fittings of the air filter housing rubber joint, throttle body, and manifold for an airtight seal. Check that all fittings are tightened securely to avoid the possibility of unfiltered air entering the engine.

⚠ DANGER

Do not start engine without air filter element. Non-filtered air will enter into the engine and cause engine wearing and damage. In addition, driving without air filter will also decrease performance and engine overheating.

Maintenance & Lubrication

Clean spark plug:

Clean spark plug while muffler and exhaust are in normal temperature.

1. Remove nut ①.
2. Remove spark plug arrester ② from muffler.
3. Tap the tailpipe lightly, and then use a wire brush to remove any carbon deposits ③ from the spark arrester portion of the tailpipe.
4. Insert the tailpipe into the muffler and align the bolt holes.
5. Install and tighten the bolts.

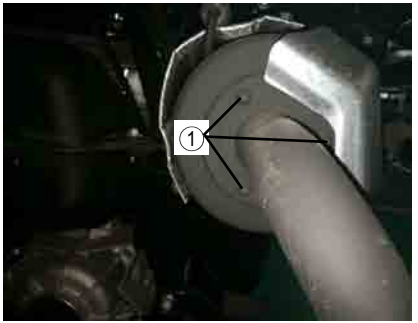

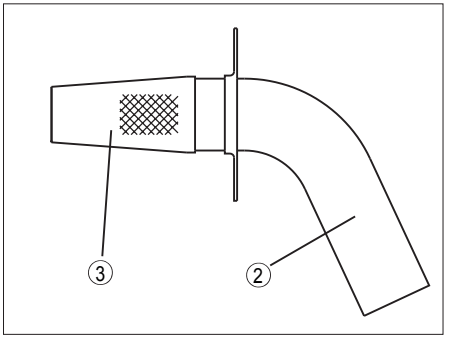

⚠ DANGER

When cleaning the spark arrester: Always let the exhaust system cool prior to touching exhaust components. Do not start the engine when cleaning the exhaust system.

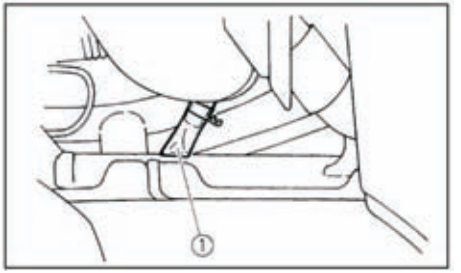

- **CVT air–inlet hose cleaning**
- If dust or water collects in the V-belt cooling duct.
- Check hose, remove the hose ① and clean it.

CVT cover drain bolt

After riding in water deep enough to allow it to enter the V-belt case, remove this bolt to drain the water from the case.

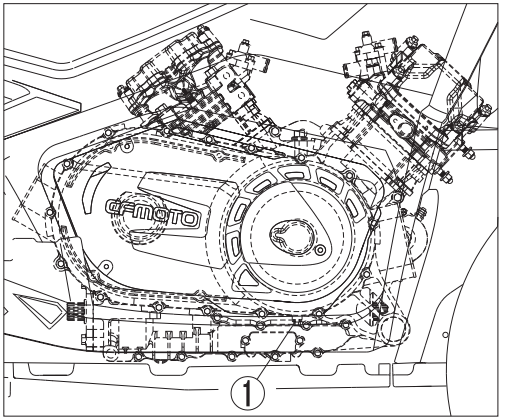

⚠ WARNING

If water drains from the V-belt case after removing the bolt, have your dealer inspect the tractor as the water may affect other engine parts.

Throttle body adjustment

The throttle body is a vital part of the engine and requires very sophisticated adjustment. Most adjusting should be left to your dealer who has the professional knowledge and experience to do so. However, the idling speed may be inspected by the owner as a part of the usual maintenance routine. The throttle body was set at the factory after many tests. If the settings are disturbed by someone without sufficient knowledge, poor engine performance and damage may result. Check idle for stability and contact your dealer for service if necessary.

Engine idle adjustment:

⚠WARNING

This vehicle is equipment with EFI system, and no need to adjust idle, or performance will be affected. Contact your dealer in case abnormal idle.

NOTE

Engine idle： 1,300r/min ± 130r/min（Heated engine）

● Engine air inlet/outlet valve clearance adjustment

The correct valve clearance changes with use, resulting in improper fuel/air supply or engine noise. To prevent this, the valve clearance must be adjusted regularly. This adjustment however, should be left to a professional service technician.

NOTE

Adjust the engine idling speed before adjusting the throttle lever free play.

1. Loosen nut ①.
2. Turn adjustment nut ② to lever travel: ⓐ : 3mm ~ 5 mm
3. Fasten nut ①.

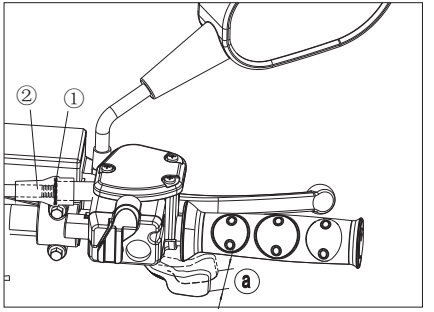

● Front brake pad inspection

Check the brake pads ① for damage and wear. Have your dealer replace the pads as a set.

● United brake pad inspection

Check the brake pads ① for damage and wear. Have your dealer replace the pads as a set.

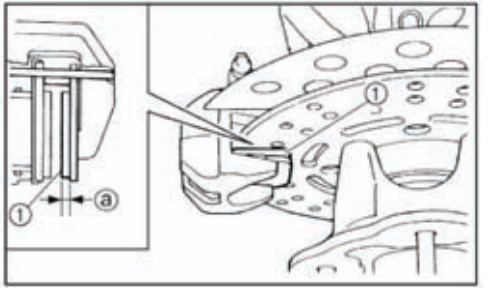

NOTE

The wheels need to be removed to check brake pads.

● Inspect brake fluid level ①

Remove the seat, and then check the fluid level.

Insufficient brake fluid may let air enter the brake system, possibly causing the brakes to become ineffective.

Before riding, check that the brake fluid is above the lower level and replenish when necessary.

The front brake fluid master cylinder reservoir is located at the right of the handlebar. The united brake fluid master cylinder reservoir is near the united brake pedal.

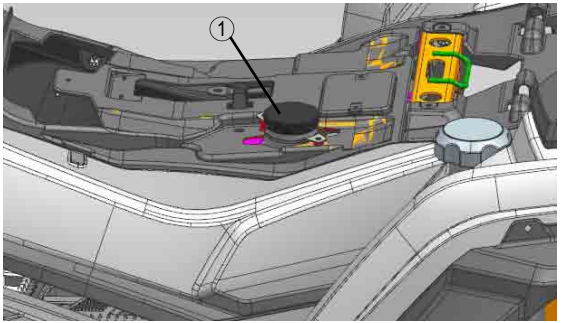

● Inspect brake fluid level

Observe these precautions:

1. When checking the fluid level, make sure the top of the master cylinder reservoir is level by turning the handlebars.
2. Use only the designated quality brake fluid. Otherwise, the rubber seals may deteriorate, causing leakage and poor brake performance.

NOTE

Recommended brake fluid: DOT 4.

3. Refill with the same type of brake fluid. Mixing fluids may result in a harmful chemical reaction and lead to poor brake performance.
4. Be careful that water does not enter the master cylinder reservoir when refilling. Water will significantly lower the boiling point of the fluid and may result in vapor lock.
5. Brake fluid may deteriorate painted surfaces or plastic parts. Always clean up spilled fluid immediately.
6. Have your dealer check the cause if the brake fluid level goes down.

Maintenance & Lubrication

● Brake fluid change

Complete fluid replacement should be done only by trained service personnel. Have your dealer replace the following components during periodic maintenance or when they are damaged or leaking.

●Replace the seals every two years；

●Replace the brake hoses every four years.

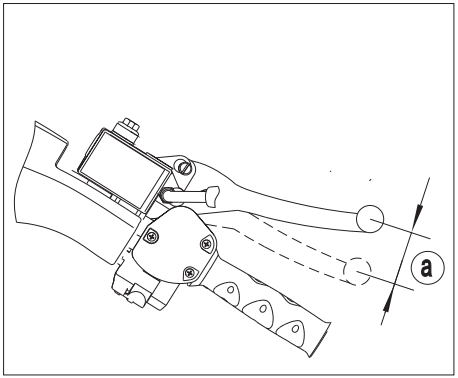

● Front lever free play

The front brake lever should have a free play of 10 mm (0.4 in) at the lever end. If not, have your dealer check the brake system.

⚠ DANGER(After servicing):

●Make sure the brakes operate smoothly and that the free play is correct.

●Make sure the brakes do not drag. Make sure the brakes are not spongy.

●All air must be bled from the brake system. Replacement of brake components requires professional knowledge. These procedures should be performed by your dealer.

Maintenance & Lubrication

● Parking brake lever free play adjustment

The parking brake lever free play ⓒ should be 0.5mm ~ 2mm;

1. Loosen the locknut ①
2. Turn the adjusting bolt ② in ⓐ direction to increase free play, and in direction ⓑ to decrease free play.
3. Tighten the locknut ①.

If correct free play cannot be obtained, ask your dealer to make that adjustment.

●Be sure not to step on the brake pedal.

●Make sure the brake pedal does not move.

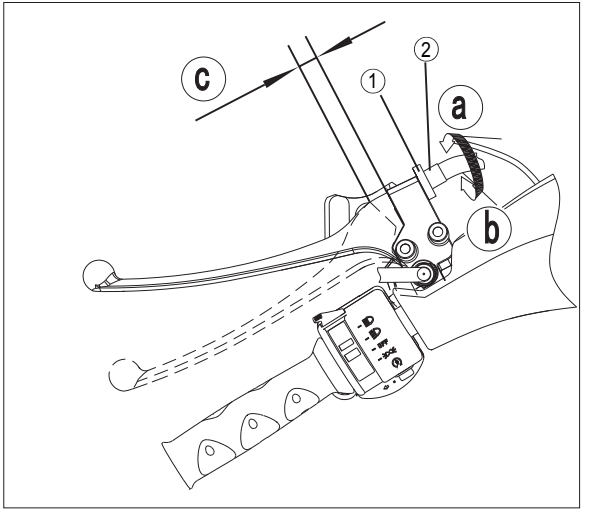

- **Parking brake**

When parking, stop the engine and shift the gear selector Lever ① into the park position.

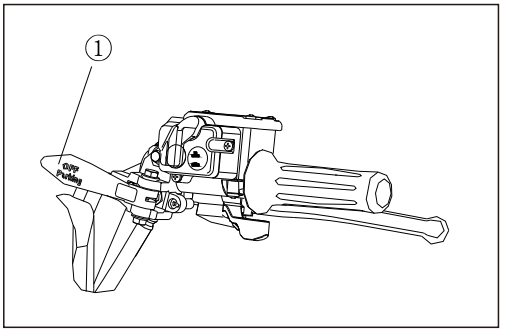

⚠WARNING

Operating the ATV/ Quadricycle while the parking brake is engaged could result in an accident and serious injury or death.

Always check to be sure the parking brake is disengaged before operating.

Important Safeguards

The parking brake may relax if left on for a long period of time. Always block the wheels to prevent rolling.

Never depend on the parking brake alone if the ATV/ Quadricycle is parked on a hill. Always block the wheels on the downhill side of the ATV / Quadricycle to prevent rolling. Another option is to park the ATV /Quadricycle in a sidehill position.

- **United brake pedal height adjustment**

NOTE

For parking brake , adjust the united brake before inspecting the brake pads.

The top of the brake pedal should be positioned 95mm~100mm above the top of the footrest.

If not, have your dealer to adjust it.

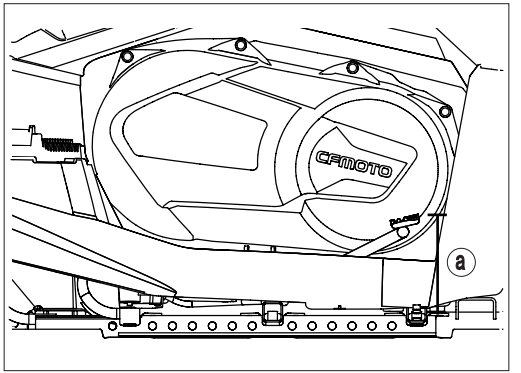

⚠ DANGER

After servicing：

- Make sure the brakes operate smoothly and that the freeplay is correct.
- Make sure the brakes do not drag.
- All air must be bled from the brake system. Replacement of brake components requires professional knowledge. These These procedures should be performed by your dealer.

Foot brake light switch

Check switch assembly or cable is properly fixed in case light failure.

Cable inspection and lubrication

⚠DANGER

Inspect cables frequently. Replace damaged cables. Lubricate the inner cables and the cable ends. If the cables do not operate smoothly, ask your dealer to replace them.

NOTE

Recommended lubricant: SAE 10W/30

Suspension Pivot Lubrication

Lubricate the upper and lower pivots of the rear suspension:

- Add grease into the upper and lower pivot grease nipples (1) located at the frame with a grease gun until grease lightly flows from the bushing.

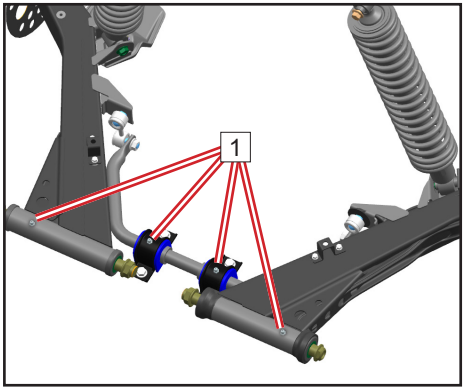

NOTE

Recommended lubricant: Lithium soap based grease

Wheel removal

1. Loosen the wheel nuts ①.
2. Elevate the tractor and place a suitable stand under the frame.
3. Remove the nuts from the wheel.
4. Remove the wheel.

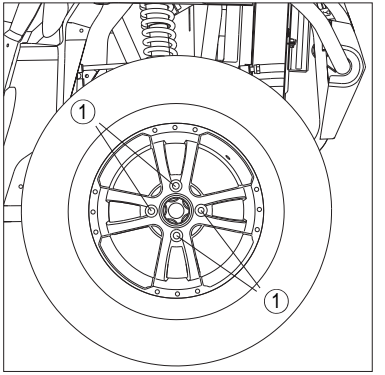

Wheel installation:

1. Install the wheel and the nuts.

NOTE

- Tapered nuts are used for both the front and rear wheels. Install the nut with its tapered side towards the wheel
- The arrow mark on the tire must point toward the rotating direction of the wheel.

2. Lower the tractor so that the wheel is on the ground.
3. Tighten the wheel nuts to the specified torque.

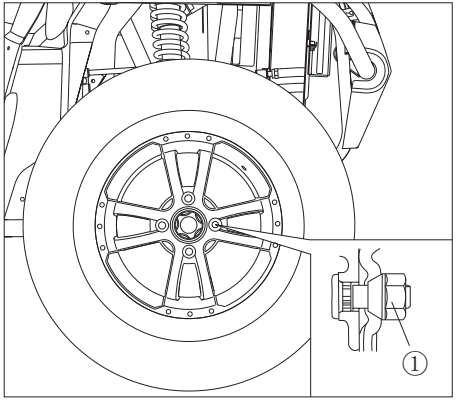

NOTE

Wheel nut torque: Front: 70 N·m~80 N·m
Rear: 70 N·m~80 N · m

● Battery

This machine is equipped with service-needless battery. Therefore it is not necessary to check the electrolyte or add distilled water in the battery. If the battery seems to have discharged, consult your dealer.

NOTE

Battery specification：12V 30Ah

Maintenance & Lubrication

⚠WARNING

Do not try to remove the sealing caps of the battery cells. You may damage the battery.

⚠ DANGER

Avoid contact with skin, eyes or clothing. Always shield eyes when working near batteries. Keep out of reach of children.

Antidote:

EXTERNAL: Flush with water. INTERNAL: Drink large quantities of water or milk. Follow with milk of magnesia, beaten egg or vegetable oil. Get prompt medical attention.

EYES: Flush with water for 15 minutes and get prompt medical attention. Keep batteries away from sparks,flames, cigarettes or other sources of ignition. Ventilate when charging or using in a closed space.

Battery maintenance:

1. When the machine is not used for a month or longer, remove the battery and store it in a cool, dark place. Completely recharge the battery before reinstallation.
2. A special battery charger (constant voltage/ampere or constant voltage) is required for recharging battery. Use a conventional battery charger may shorten the battery life.
3. Always make sure the connections are correct when putting the battery back in the machine.

Maintenance & Lubrication

- **Fuse replacement**

1. The main fuse ①, fuse box ② and relay box ③ are located under front top cover.
2. If a fuse is blown, turn off the main switch and install a new fuse of the specified amperage. Then turn on the switches. If the fuse immediately blows again, consult your dealer.

Danger:

Always use a fuse of the specified rating.
Never use a material in place of the proper fuse.

⚠ WARNING

To prevent accidental short-circuit, turn off the main switch when checking or replacing a fuse.

Headlight bulb replacement:

NOTE: Both headlight and taillight assy are LED lights,which cannot be repaired if damaged or failed. Please have your dealer replace the entire assembly when the LED light is damaged or failed.

- **Headlight beam adjustment**

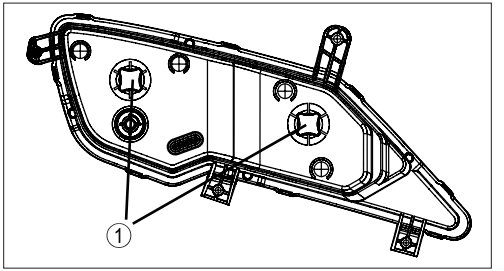

⚠WARNING

It is advisable to have your dealer make this adjustment.

Turn the adjusting screws ① can raise or lower the beam.

Tail/brake light replacement:

Tail/brake light bulb is LED, it can not be replaced separately.

Replace the whole light as necessary.

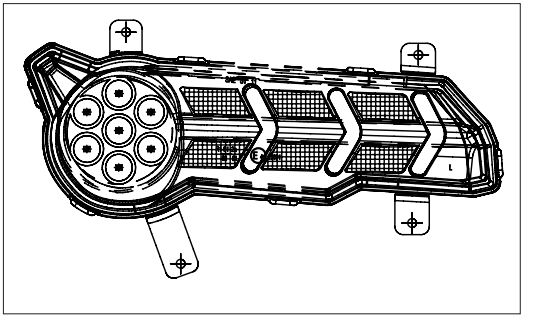

- **Front and rear suspension adjustment**

The spring preload can be adjusted to suit the rider's weight and riding conditions.

Standard shock absorbers

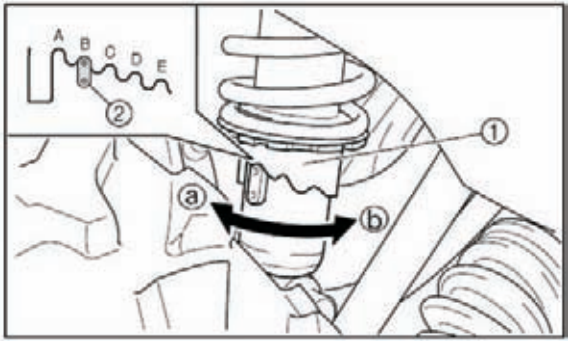

NOTE

When adjusting the rear shock absorbers, the rear wheels need to be removed. Adjust the spring preload as follows.

To increase the spring preload, turn the adjusting ring in direction ⓐ .

To decrease the spring preload, turn the adjusting ring in direction ⓑ .

NOTE

A special wrench①can be obtained at a dealer to make this adjustment.

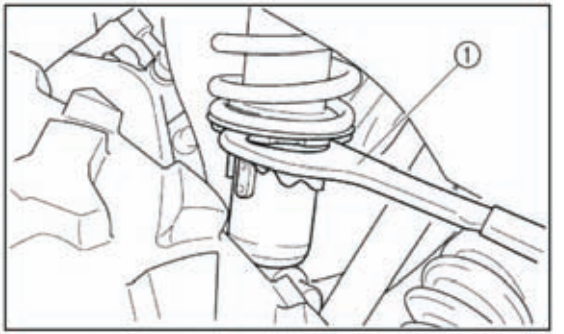

Standard position: ⓑ

A- Minimum（soft）

E- Maximum（hard）

⚠ DANGER

Always adjust the shock absorbers on the left and right side to the same setting.

Maintenance & Lubrication

Optional shock absorber adjustment
(Front adjustment procedures)

Spring adjustment:

Loosen lock nut ②, Turn adjust nut ③ to proper hardness, then tighten lock nut ②.

Damping restore adjustment:

Turn adjuster ④ to SLOW side until to end and counter shifts, then turn to FAST side until suitable to your comfort.

Damping press adjustment:

Turn adjuster ① to HARD side and counter shifts, then to SOFT side until suitable to your comfort.

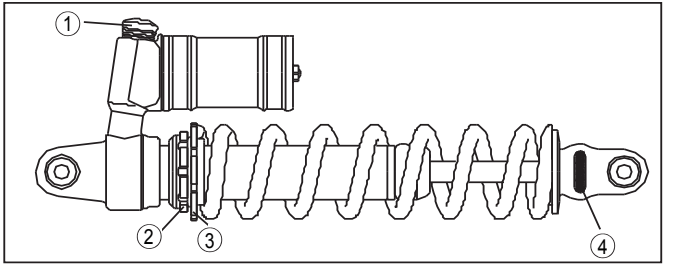

Optional 2 shock absorber adjustment
(Rear adjustment procedures)

Spring adjustment:

Loosen lock nut ③, turn adjust nut ② to proper hardness, then tighten lock nut ③.

Damping restore adjustment:

Turn adjuster ① to SLOW side until to end and counter shifts, then turn to FAST side until suitable to your comfort.

Damping press is not possible to adjust.

⚠ATTENTION

After adjustment, keep left and right shock absorber balance.

Vehicle immersion

⚠WARNING

If your vehicle becomes immersed, major engine damage can result if the machine is not thoroughly inspected. Take the vehicle to your dealer before starting the engine. For example, if engine is not properly handled after immersion, starting will damage the engine.

Clean & Storage

Cleaning the Tractor

Keeping your tractor clean will not only improve its appearance, but it can also extend the life of various components. With a few precautions, your tractor can be cleaned much like an automobile

Washing the Tractor

The best and safest way to clean your tractor is with a garden hose and a pail of mild soap and water. Use a professional type washing mitten, cleaning the upper body first and the lower parts last. Rinse with water frequently and dry with a chamois to prevent water spots.

NOTE

If warning and safety labels are damaged, contact your dealer for replacement.

CFMOTO does not recommend the use of a high pressure type car wash system for washing your tractor. If a high pressure system is used, exercise extreme care to avoid water damage to the wheel bearings, transmission seals, body panels, brakes, warning labels, air filter intake system and electric system, etc. Water is not allowed to enter into air filter.

NOTE

Grease all fittings immediately after washing, and allow the vehicle to run for a while to evaporate any water that may have entered the engine or exhaust system.

Clean & Storage

Waxing the Tractor

Your tractor can be waxed with any non–abrasive automotive paste wax. Avoid the use of harsh cleaners since they can scratch the body finish.

⚠ CAUTION

Certain products, including insect repellants and chemicals, will damage plastic surfaces. Use caution when using these products near plastic surfaces.

⚠ CAUTION

Starting the engine during the storage period will disturb the protective film created by fogging and damage could occur. Never start the engine during the storage period.

Clean the Exterior

Make necessary repairs and then clean the tractor thoroughly with mild soap and warm water to remove all dirt and grime.Do not use harsh detergents or high pressure washers.Some detergents deteriorate rubber parts.Use dish soap type cleaners only.High pressure washers may force water past seals.

Clean & Storage

Oil and Filter

Warm the engine, then stop the engine and change the oil and filter.

⚠ CAUTION

When drain out fuel in fuel pipe and air pipe, if dashboard says only one grid of fuel left, remove fuel pump connector to drain out fuel in fuel tank, or else, it may damage fuel pump.

Air Filter/ Air Box

Inspect and clean or replace air filter. Clean the air box and drain the sediment tube.

Fluid Levels

Inspect the following levels and change if necessary: front gear case, rear gear case, engine oil, brake fluid (change every two years or as required if fluid looks dark or contaminated), coolant.

Clean & Storage

Fog the Engine

Remove spark plug and add 15mL~20mL SAE 15W/40 SG engine oil. To access the plug hole, use a section of clean hose and a small plastic squeeze bottle filled with the pre–measured amount of oil.

⚠ CAUTION

Do this carefully! If you miss the plug hole, oil will drain from the spark plug cavity, and appear to be an oil leak.

Remove plug cap and turn crankshaft to make engine run slowly. Oil will be forced in and around the piston, piston rings and coating the cylinder with a protective film of fresh oil.

If you choose not to use the above way, perform the following procedure:

1. Support the front end of the vehicle so the engine is level or tilted slightly rearward.
2. Remove the spark plug, rotate the piston to BDC and pour approximately 15mL~20mL oil into cylinder.
3. Remove plug cap and turn crankshaft to make engine rotate slowly.
4. Turn engine several times to ensure the coverage of piston rings and cylinder walls.
5. Treat the fuel system with fuel stabilizer.
6. If fuel system fuel stabilizer is not used, fuel tank, fuel pipe and throttle body should be completely drained of gasoline. To eliminate any fuel remaining in the fuel pipe.

Clean & Storage

Lubricate

Inspect all cables and lubricate with cable lubricant. Follow lubrication guidelines in the maintenance section of the service manual to completely grease and lubricate the entire vehicle with All Season Grease.

Battery Storage

Remove battery from the vehicle and ensure that it is fully charged before placing it in storage.

Engine Anti–Freeze

Test engine coolant strength and change if necessary. Coolant should be replaced every two years.

Storage Area/Covers

Set the tires to specified air pressure and support the tractor with tires 30mm ~ 40mm off the ground. Be sure the storage area is well ventilated and cover the machine with a tractor cover.

NOTE

Do not use plastic or coated materials. They do not allow enough ventilation to prevent condensation, and may promote corrosion and oxidation.

Transporting the Tractor

ATV cannot be transported in a stand up position, follow these procedures when transporting the vehicle:

1. Turn off the engine and remove the key to prevent loss during transporting.
2. Place the gear into any position except Park position, block front and rear wheels to prevent tractor rolling.
3. Fix both the front and rear frame of tractor at the same time, prevent tractor slide or move during transportation.
4. Be sure the fuel cap, oil cap and seat are installed correctly.

⚠ CAUTION

Never transport tractor with gear in Park position, or else engine will be damaged.

Troubleshooting

Drive belt and cover problems

Fail Reason	How To Avoid Failure
Driving the ATV onto a pickup or tall trailer in high range.	Shift transmission to low gear during loading of the ATV to prevent belt burning.
Starting out going up a steep incline.	When starting out on an incline, use low gear or dismount the ATV (after first applying the park brake) and perform the K-turn.
Driving at low RPM or low ground speed(at approximately 5 km/h~10 km/h).	Drive at a higher speed or use low gear more frequently. The use of low gear is highly recommended for cooler CVT operating temperatures and longer component life.
Insufficient warm-up of ATVs exposed to low ambient temperatures.	Warm the engine before driving, the belt will become more flexible and prevent belt burning.
Slow and easy clutch engagement.	Use the throttle quickly and effectively for efficient engagement.
Towing/pushing at lowRPM/low ground speed.	Use low gear only.
Utility use/plowing snow, dirt, etc.	Use low gear only.

Troubleshooting

Fail Reason	
Stuck in mud or snow.	Shift the transmission to low gear, and carefully use fast, aggressive throttle application to engage clutch. WARNING: Excessive throttle may cause loss of control and vehicle overturn.
Climbing over large objects from a stopped position.	Shift the transmission to low gear, and carefully use fast, brief, aggressive throttle application to engage clutch. Excessive throttle may cause loss of control and vehicle overturn.
Belt slippage from water or snow ingestion into the CVT system.	Remove the CVT cover，drain the water from CVT.
Clutch malfunction.	Contact your dealer for inspection of clutch components.

Troubleshooting

Engine doesn't turn over

Fail Reason	How To Avoid Failure
Poor engine performance.	Check for fouled plugs or foreign material in gas tank, fuel lines, or throttle. Contact your dealer for service.
Tripped circuit breaker	Reset the breaker
Low battery voltage	Recharge battery to 12.8 VDC
Loose battery connections	Check all connections and tighten
Loose solenoid connections	Check all connections and tighten

Engine Pings or Knocks

Fail Reason	How To Avoid Failure
Poor quality or low octane fuel	Replace with recommended fuel
Incorrect ignition timing	See your dealer
correct spark plug gap or heat range	Set gap to specs or replace plugs

Troubleshooting

EngineStops or loses power

Fail Reason	How To Avoid Failure
Overheated engine	Clean radiator screen and core if equipped Clean engine exterior See your dealer

Troubleshooting

Engine Turns Over, Fails to Start

Fail Reason	How To Avoid Failure
Out of Fuel	Refuel
Clogged fuel valve or filter	Inspect and clean or replace
Water is present in fuel	Drain the fuel system and refuel
Fuel valve is out of use	Replace
Old or non-recommended fuel	Replace with new fuel
Fouled or defective spark plug(s)	Inspect plug(s), replace if necessary
No spark to spark plug	Inspect plug(s), verify stop switch is on
Crankcase filled with water or fuel	Immediately see your dealer
Overuse of choke	Inspect, clean and/or replace spark plugs
Clogged fuel injector	Clean or replace new fuel injector
Low battery voltage	Recharge battery to 12.8 VDC
Mechanical failure	See your dealer

Troubleshooting

Engine Backfires

Fail Reason	How To Avoid Failure
Weak spark from spark plugs	Inspect, clean and/or replace spark plugs
Incorrect spark plug gap or heat range	Set gap to specs or replace plugs
Old or non-recommended fuel	Replace with new fuel
Incorrectly installed spark plug wires	See your dealer
Incorrect ignition timing	See your dealer
Mechanical failure	See your dealer

Engine Runs Irregularly, Stalls or Misfires

Fail Reason	How To Avoid Failure
Fouled or defective spark plugs	Inspect, clean and/or replace spark plugs
Worn or defective spark plug wires	See your dealer
Incorrect spark plug gap or heat range	Set gap to specs or replace plugs
Loose ignition connections	Check all connections and tighten
Water present in fuel	Replace with new fuel
Low battery voltage	Recharge battery to 12.8 VDC

Troubleshooting
Engine Runs Irregularly, Stalls or Misfires

Fail Reason	How To Avoid Failure
Kinked or plugged fuel vent line	Inspect and replace
Incorrect fuel	Replace with recommended fuel
Clogged air filter	Inspect and clean or replace
Reverse speed limiter malfunction	See your dealer
Electronic throttle control malfunction	See your dealer
Other mechanical failure	See your dealer
Possible Lean or Rich Fuel Mixture Cause	Solution
Low or contaminated fuel	Add or change fuel, clean the fuel system
Low octane fuel	Replace with recommended fuel
Clogged fuel filter	Replace filter
Incorrect jetting	See your dealer
Overuse of choke	Inspect, clean and/or replace spark plugs
Fuel is very high octane	Replace with lower octane fuel

Troubleshooting

Engine Stops or Loses Power

Fail Reason	How To Avoid Failure
Out of fuel	Refuel
Kinked or plugged fuel vent line	Inspect and replace
Water present in fuel	Replace with new fuel
Overuse of choke	Inspect, clean and/or replace spark plugs
Fouled or defective spark plugs	Inspect, clean and/or replace spark plugs
Worn or defective spark plug wires	See your dealer
Incorrect spark plug gap or heat range	Set gap to specs or replace plugs
Loose ignition connections	Check all connections and tighten
Low battery voltage	Recharge battery to 12.8 VDC
Clogged air filter	Inspect and clean or replace
Reverse speed limiter malfunction	See your dealer
Electronic throttle control malfunction	See your dealer
Other mechanical failure	See your dealer

EPS system

EPS indicator on the Dashboard will be on when EPS system ① is equipped to the vehicle. Normally, EPS indicator will be on ② after ignition switch is turned to ON but EPS will not work.When the engine is started, EPS indicator will be off and EPS starts to function.

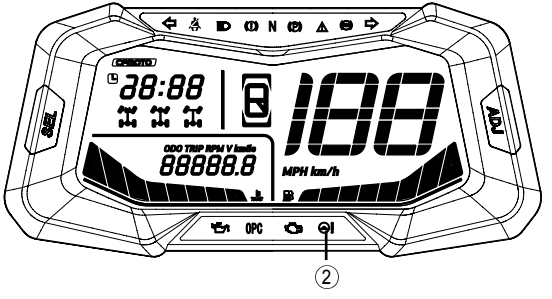

Trouble Code

Each trouble code consists of 2 digits,denoted by the times of long flash and short flash of EPS indicator.
Times of long flash represent the tens digit;
Times of short flash represent the single digit;
Duration of long flash: 2 sec.
Duration of short flash: 1 sec.
Flash interval: 1 sec.
The flash cycle will repeat after EPS indicator turns off for 3 seconds.

NOTE : **In case of an EPS failure, do not disassemble the EPS system. Check the wiring for any loosening connection. Otherwise please contact an authorized dealer for service.**

EPS fault diagnosis and solution

Ref No	Trouble shooting	Possible causes	Repair procedures
1	No steering assist to handlebar	Improper plug connection	Check the plugs and connections
		Burnt fuse	Replace fuse(30A)
		Failure of Controller, Motor or sensor	Contact authorized dealer and replace the parts.
2	Asymmetrical steering assist to left and right turning	Improper voltage output from sensor	Contact authorized dealer for adjustment or replacement
		Controller, Motor or sensor break down	Contact authorized dealer and replace the parts.
3	Steering swing	Wrong connections at motor terminals	Change the terminal connection of the red and black wire
		Controller or sensor break down	Contact authorized dealer for parts and replacement
4	Low power steering assist	Low battery	Recharge or replace battery
		Motor break down.	Contact authorized dealer for replacement
		Low pressure with Front tires	Inflate tires to the required pressure
5	Noise from system	Motor break down.	Contact authorized dealer for replacement
		Steering system parts wear out and big clearance exist.	Replace the related parts.
		Improper assembly of steering column or meichanical steering assembly parts	Check and tighten all of bolts.

Technical specifications

Items	Specifications
	CF800ATR-3
Overall Length	2310mm
Overall Width	1250mm
Overall Height	1420mm
Wheel Base	1480mm
Minimum ground clearance	285mm
Min. turning radius	7600mm
Basic weight: (With engine oil and full fuel in tank)	479kg
Engine model and type	2V91W-A
Type	V-twin cylinder、4-stroke、liquid-cooled、8 valves、SOHC
Bore×Stroke	91mm×61.5mm
Displacement	800mL
Compression ratio	10.3 :1
Starting type	Electric start
Maximum speed	60km/h

Technical specifications

Items	Specifications
Engine oil: Type Engine oil volume: Total engine oil volume Oil change with filter	 SAE 15W/40 SG 2.6 L 2.5 L
Transmission oil: Type Periodic oil change	 SAE 75W/90 GL-5 0.6L
Rear axle oil Type Volume Periodic oil change	 SAE 80W/90 GL-5 0.40 L
Front axle oil: Type Volume Periodic oil change	 SAE 80W/90 GL-5 0.23 L
Air filter	Sponge and paper filter element

Technical specifications

Items			Specifications
Fuel type Fuel tank capacity Fuel reverse amount			95(RON) or E10 30 L 4.0 L
Spark plug: Type Spark plug gap			 DCPR8E (NGK) 0.8mm~0.9mm
Transmission	Clutch type		Dry and centrifugal automatic
	Transmission		(CVT) + Gear shift
	Gear shift/order		Manually/L－H－N－R－P
	CVT ratio		2.88~0.70
	Gear ratio	Final	1.333（20/15）
		Secondary	1.952(41/21)
		Total	L: 43/17 = 2.529 H：32/28 = 1.143 R: 29/13 = 2.231
Chassis Frame Caster angle Kingpin offset			 Steel tube 9° 52′ 25.5 mm

Technical specifications

Items	Specifications
Tire: Type	Tubeless
Size Front tire	AT26×9-14 / AT26×9-12
Rear tire	AT26×11-14 / AT26×11-12
Tire pressure:	
Front tire	45 kPa
Rear tire	45 kPa
Brake system:	
Front brake Type	Double disc
Operation	Operated by right hand
United brake Type	Double disc
Operation	Operated by right foot
Suspension:	
Front suspension	Double A-arm and independent
Rear suspension	Double A-arm and independent

Technical specifications

Items	Specifications
Shock absorber: Front shock absorber Rear shock absorber	 Coil spring/Oil damper or Coil spring + Gas/Oil damper Coil spring/Oil damper or Coil spring + Gas/Oil
Wheel travel: Front wheel travel Rear wheel travel	 180 mm 190 mm
Electric system Ignition Flywheel	 ECU A.C magneto
Headlight type Head light	 LED 12V 7W×2
Front position light	LED 12V 3W ×2
Tail light/Brake light	LED 12V/3W×2 12V/18W×2
Turn light	LED 12V 1.2W
Battery capacity	12V30Ah

Technical specifications

Items		Specifications
Dashboard	“N” indicator light	Green/ LED
	“R” indicator	LCD
	“P” indicator	LCD
	“H” indicator	LCD
	“L” indicator	LCD
	Dashboard light	LCD
	Turn indicator light	Green/ LED
	Hi-beam indicator light	Blue/ LED
	Overriding indicator light	Red/ LED
	2WD/4WD indicator	LCD
	Water temp. indicator	LCD
	Fuel indicator	LCD
	EFI trouble indicator light	LED

EPS specification

Ref No	Item	Specification
1	Motor type	DC Permanent Magnet Motor
2	Rated voltage	12 V
3	Max. Input Current to Controller	35 A
4	Motor Power	380 W
5	Max. Output Torque	4 N·m
6	Reducer Type	Worm reducer
7	Reduction Ratio	21
8	Max. Output Torque from Driver	80 N·m
9	Torque Sensor	Non-contact magnetic potentiometer
10	Torsion Rod Rigidity	8 N·m
11	Operating Angle Of Torque Sensor	±3°
12	Operating Temp.Range Of EPS Assy	–40 ℃ ~ +60 ℃
13	Protection Degree Of EPS Assy	Ip67

Periodic Maintenance Schedule and Icon Key

⚠ WARNING

Improperly performing the procedures marked with a ■ could result in component failure and lead to serious injury or death. Have an authorized dealer perform these services.

RECOMMENDED LUBRICATION

Check all components at the intervals outlined in the Periodic Maintenance Schedule. Items not listed in the schedule should be lubricated at the general lubrication interval.

KEY POINTS OF LUBRICATION CHART

- Change Lubricants more often under severe use, such as wet or dusty conditions.
- Use All Season Grease on pivot points.
- Lubricate every 500km (310.6 miles), before long periods of storage, after pressure washing, or after submerging drivetrain.

Items	Lube	Methods
Engine Oil	SAE15W/40 SG	Unscrew, wipe, insert and remove dipstick to check level
Transmission oil	SAE75W/90 GL-5	Unscrew, wipe, insert and remove dipstick to check level
Brake Fluid	DOT4	Keep level between upper and lower lines
Front Gear Case Oil	SAE80W/90 GL-5	Keep level at the filler rim
Rear Gear Case Oil	SAE80W/90 GL-5	Keep level at the filler rim
Grease Pivot Points	All Season Grease	Grease gun - Pump grease until it flows lightly from the pivot point

Maintenance Chart Key

▶ Perform the procedure more often on vehicles subjected to severe use.
Have an authorized dealer perform repairs that involve this component.

◆ Emission-related components.

Item		Maintenance Interval (Whichever comes first)			Remarks
		HOURS	CALENDAR	KM(MILES)	
■	Steering		Pre-Ride		Make adjustments as needed.
▶	Front suspension		Pre-Ride		
▶	Rear suspension		Pre-Ride		
	Tires		Pre-Ride		
▶	Break fluid level		Pre-Ride		
▶	Brake lever/pedal travel		Pre-Ride		
	Brake system		Pre-Ride		
	Wheels/fasteners		Pre-Ride		
	Frame fasteners		Pre-Ride		
▶	Engine oil level		Pre-Ride		
▶	Air Inlet, Air filter				Inspect and clean if necessary
▶	Air box sediment tuber				Drain Deposits when visible

	Coolant	50h	Daily	1500(932)	Change every 2 years or 6000km/200h. Initial check: after 20h or 750km.
	Headlight / tail light		Daily		Check operation; apply dielectric grease if replace.
◆	Air filter,element	50h		1500(932)	Inspect, Clean every 1000km or 100hours. Initial replacement: 750km or 20h.
	CVT outlet pipe		Weekly		Drain water as needed, check often if operating in wet condition.
	Brake pad wear	10h	Monthly	100(62)	Inspect periodically
	Battery	20h	Monthly	200(124)	Check terminals;clean;test
▶	Front gear case oil	25h	Monthly	250(155)	Inspect level;change yearly
▶	Rear gear case oil	25h	Monthly	250(155)	Inspect level;change yearly
▶	Transmission oil	25h	Monthly	250(155)	Inspect level;change yearly
▶	Engine oil change (break- in)	20h		250(155)	Change
▶	General lubrication	50h	3M	500(310)	Lubricate all fittings,pivots,cables,ect.

	Steering knuckle	50h	6M	500(310)	Lubricate
■	Steering handlebar	50h	6M	500(310)	Lubricate
▶	Front suspension	50h	6M	500(310)	Lubricate
	Rear suspension	50h	6M	500(310)	Lubricate
	Gearshift	28h	1M	500(310)	Inspect;adjust;lubricate;
■	Throttle Cable/ Switch	50h	6M	500(310)	Inspect;adjust.lubricate; replace if necessary
	Drive belt	50h	6M	1500(932)	Inspect ; adjust; replace if necessary. Replace for every 3000km
	Cooling system	50h	6M	500(310)	Inspect coolant strenght seasonally; pressure test system yearly
▶	Engine oil change	100h	12M	3000(1864)	Perform a break-in oil change at 25 hours/750km
▶◆	Fuel hoses	100h	12M	1000(621)	Inspect routing, condition, Replace high pressure fuel hose

■ ◆	Valve clearance	100h	12M	3000(1864)	Inspect; Adjust, Initial :750km or 20h
■	Fuel system	100h	12M	1000(621)	Inspect cap of fuel tank, fuel pump and relay
■	Oil filter	100h	12M	3000(1864)	Initial change:750km or 20h
▶	Radiator	200h	24M	3000(1864)	Inspect; Clean extemal surfaces
▶	Cooling hoses	100h	12M	1000(621)	Inspect ;Initial:300km or 10h
▶	Engine mounts	100h	12M	3000(1864)	Inspect. Initial: 300km or 10h
	Exhaust pipe and muffler	100h	12M	1000(621)	Inspect
	Ignition coil	100h	12M	1000(621)	Inspect and replace as needed
	ECU	100h	12M	1000(621)	Inspect and replace as needed
	Wirings and cables	100h	12M	1000(621)	Inspect for wear, routing, security; apply dielectric grease to connections subjected to water, mub, etc.

	Clutches(drive and driven pulley)	100h	12M	3000(1864)	Inspect; clean; replace worn parts
	Wheel bearings	100h	12M	1600(994)	Inspect and replace as necessary
	Brake fluid	200h	24M	2000(1242)	Change every two years
◆	Spark plug	100h	12M	3000(1864)	Initial:750km or 20h. Replace every 6000km
	Idle condition				Inspect every component 1300±130rpm
	Toe adjustment				Inspect periodically;adjust when parts are replaced
	Auxiliary brake				Inspect daily; adjust as necessary
	Headlight aim				Adjust as needed

Declaration of Vibration declaration

The undersigned: Lai Minjie, General Manager
Company name and address of the manufacturer:
ZHEJIANG CFMOTO POWER CO., LTD.
No.116, Wuzhou Road, Yuhang Economic Development Zone, Hangzhou, 311100,
Zhejiang Province P.R.China
Make (trade name of the manufacturer): CFMOTO
Type: CF800ATR-3
Variant(s): CF800ATR-3
Version(s): A
Commercial name(s) (if available): CFORCE 850XC,CFORCE 800XC
Category, subcategory and speed index of the vehicle: T3b

Hereby declares that:
For the following vehicle:
The value of the vibration level measured according to Annex XIV to EU 1322/2014 is

Declaration of Vibration declaration

Driver mass		a_{wS} m/s^2	CF800ATR-3	Requirement
59±1kg	T1	Test run 1	1.20	Deviation<10% between test run 1/2 and Arithmetic mean, a_{wS}<1.25 m/s^2
	T2	Test run 2	1.23	
	A	Arithmetic mean	1.22	
98±5kg	T1	Test run 1	1.14	Deviation<10% between test run 1/2 and Arithmetic mean, a_{wS}<1.25 m/s^2
	T2	Test run 2	1.15	
	A	Arithmetic mean	1.15	

a_{wS}:rms value of the weighted seat vibration acceleration measured during a standard roadway test

Place: Hangzhou, China Date:28 July. 2017

Signature: Name and position in the company: Lai Minjie, General Manager

LIMITED WARRANTY

ZHEJIANG CFMOTO POWER CO., LTD gives a limited warranty on all components of your CFMOTO **ATV** against defects in material or workmanship within the period and under the conditions described below.

This warranty covers parts and labor charges for repair or replacement of defective parts and begins on the date of purchase by the original retail purchaser. This warranty is transferable to another owner during the warranty period through a CFMOTO dealer, but any such transfer will not extend the original term of the warranty.

LIMITATIONS OF LIABILITY

THIS WARRANTY IS EXPRESSLY GIVEN AND ACCEPTED IN LIEU OF ANY AND ALL OTHER WARRANTIES, EXPRESSED OR IMPLIED, INCLUDING BUT NOT LIMITED TO ANY IMPLIED WARRANTY OF MERCHANTABILITY OR FITNESS FOR A PARTICULAR PURPOSE. TO THE EXTENT THAT THEY CAN NOT BE DISCLAIMED, THE IMPLIED WARRANTIES ARE LIMITED IN DURATION TO THE LIFE OF THE EXPRESS WARRANTIES. INCIDENTAL AND CONSEQUENTIAL DAMAGES ARE EXCLUDED FROM COVERAGE UNDER THIS WARRANTY. SOME STATES/PROVINCES DO NOT ALLOW FOR THE DISCLAIMERS, LIMITATIONS AND EXCLUSIONS IDENTIFIED ABOVE, AS ARESULT, THEY MAY NOT APPLY TO YOU. THIS WARRANTY GIVES YOU SPECIFIC RIGHTS, AND YOU MAY ALSO HAVE OTHER LEGAL RIGHTS WHICH MAY VARY FROM STATE TO STATE, OR PROVINCE

TO PROVINCE.

Neither the distributor, CFMOTO dealer nor any other person has been authorized to make any affirmation, representation or warranty regarding the product, and other than those contained in this limited warranty, if made, shall not be enforceable against CFMOTO. CFMOTO reserves the right to modify this warranty at any time, being understood that such modification will not alter the warranty conditions applicable to the products sold while this warranty is in effect.

REGISTRATION

The Dealer must register the vehicle online and provide the completed registration form to ZHEJIANG CFMOTO POWER CO., LTD within ten (10) days of completing the sale of the vehicle. Please note that NO warranty claims will be processed unless the product warranty online registration form is completed and the form is received by ZHEJIANG CFMOTO POWER CO., LTD from the Dealer. Initial dealer preparation and set-up of your vehicle is very important in ensuring trouble-free operation. Purchasing a machine in the crate or without proper dealer set-up will void your warranty coverage.

EXCLUSIONS-ARE NOT WARRANTED

The following are not warranted under any circumstances:

1. Normal wear and tear;
2. Damage caused by abuse, abnormal use, neglect or operation of the product in a

manner inconsistent with the recommended operation described in the Owner's Manual;

3. Damage caused by failure to provide proper maintenance and/or storage, as described in the Owner's Manual;

4.Damage resulting from removal of parts, improper repairs, service, maintenance, or use of parts not manufactured or approved by CFMOTO or resulting from repairs done by a person that is not an authorized servicing CFMOTO dealer;

5. Routine maintenance items, tune-ups, adjustments;

6. Damage resulting from accident, submersion, fire, theft, vandalism or any force majeure;

7. Operation with fuels, oils or lubricants which are not suitable for use with the product (see the Owner's Manual);

8. Damages from rust, corrosion or exposure to the elements;

9. Damage resulting from water or snow ingestion;

10. Damage resulting from the racing or any other competitive activity

11. Damage resulting from use of vehicle as a rental vehicle.

12. Damage resulting from the vehicle has been altered or modified in such a way so as to adversely affect its operation, performance or durability, or has been altered or modified to change its intended use;

13. Incidental or consequential damages, or damages of any kind including without limitation towing, storage, telephone, rental, taxi, inconvenience, insurance coverage, loan

payments, loss of time, loss of income etc.

WARRANTY COVERAGE PERIOD

This warranty will be in effect from the date of delivery to the first retail consumer. For the applicable period below:

Twelve (12) CONSECUTIVE MONTHS, for private use owners. Any vehicles used for commercial purposes will have their warranty period reduced to **six (6) months**.

This warranty period is the CFMOTO factory's basic warranty period, and the duration of this warranty may vary by international region based upon local laws, regulations and distributors' policy. Please Note the warranty period you get from dealers may the same or more than this limited warranty, but not less.

If ZHEJIANG CFMOTO POWER CO., LTD covers a full engine replacement or a complete vehicle replacement under this warranty, the warranty period does not get extended and remains the same as the original purchase date of the vehicle at issue.

LIMITATIONS OF WARRANTIES AND REMEDIES

The CFMOTO limited warranty excludes damages or failures caused by abuse, accident, fire, or any other cause other than a defect in materials or workmanship and provides no coverage for consumable components, general wear items, or any parts exposed to friction surfaces, stresses, environmental conditions and/or contamination for which they were not designed or not intended, including but not limited to the following items:

- Bushings
- Wheels and tires
- Suspension components
- Seat components
- Clutches and components
- Steering components
- Batteries
- Light bulbs/Sealed beam lamps
- Filter
- Lubricants
- Bearings
- Finished and unfinished surface
- Engine components
- Drive belts
- Hydraulic components and fluids
- Circuit breakers/Fuses
- Spark plugs
- Sealants
- Coolants
- Bearings

CONDITIONS TO HAVE WARRANTY COVERAGE

This warranty coverage is available only if each of the following conditions has been fulfilled:

1. The **CFMOTO ATV** must be purchased as new and unused by its first owner from a CFMOTO dealer authorized to distribute **CFMOTO ATV** in the country in which the sale occurred;
2. The CFMOTO specified pre-delivery inspection process must be completed and documented and signed by the purchaser;
3. The **CFMOTO ATV** must have undergone proper registration by an authorized CFMOTO dealer;

4. The **CFMOTO ATV** must be purchased in the country in which the purchaser resides;

5. Routine maintenance outlined in the Owner's manual must be timely performed in order to maintain warranty coverage. CFMOTO reserves the right to make warranty coverage contingent upon proof of proper maintenance. CFMOTO will not honor this limited warranty to any private use owner or commercial use owner if one of the preceding conditions has not been met. Such limitations are necessary in order to allow CFMOTO to preserve both the safety of its products, and also that of its consumers and the general public.

HOW TO OBTAIN WARRANTY SERVICE

The customer must cease using the **CFMOTO ATV** upon the appearance of an anomaly. The customer must notify a servicing CFMOTO dealer within three (3) days of the appearance of a defect, and provide it with reasonable access to the product and reasonable opportunity to repair it. The customer must also present to the authorized CFMOTO dealer, proof of purchase of the product and must sign the repair/work order prior to starting the repair in order to validate the warranty repair. All parts replaced under this limited warranty become the property of CFMOTO.

WHAT CFMOTO DEALER WILL DO

A CFMOTO authorized Dealer must perform warranty coverage repairs at no charge to the customer, even if they are not the dealer that sold the CFMOTO vehicle to the customer and must use CFMOTO OEM parts for all warranty repairs. All vehicles sold by the dealer must be inspected and tested by the dealer to ensure proper performance and operation prior to delivery to the customer. No vehicles may be delivered to a customer without first passing a dealer inspection and an operational test.

EXPORTED PRODUCTS

EXCEPT WHERE SPECIFICALLY REQUIRED BY LAW, THERE IS NO WARRANTY OR SERVICE BULLETIN COVERAGE ON THIS PRODUCT IF IT IS SOLD OUTSIDE THE COUNTRY OF THE SELLING DEALER'S AUTHORIZED LOCATION. This policy does not apply to products that have received authorization for export from POLARIS. Dealers may not give authorization for export. You should consult an authorized dealer to determine this product's warranty or service coverage if you have any questions. This policy does not apply to products registered to government officials or military personnel on assignment outside the country of the selling dealer's authorized location. This policy does not apply to Safety Bulletins.

9AW3-380102-1 EU188

ZHEJIANG CFMOTO POWER CO., LTD.

No.116,Wuzhou Road,Yuhang Economic Development Zone,
Hangzhou 311100,Zhejiang Province
Tel: 86-571-89265799 Fax: 86-571-89265788
E-mail: export@cfmoto.com.cn www.cfmoto.cn